DORMA

9000

Grade 1 Exit Device

CONTENTS

9000 Series Premium Exit Devices	**Overview**	3
	Certification & Specifications	4
	Data & Features	5
	ANSI Functions	6
Applications & Listings	Single Doors	8
	Pair of Doors with Removable Mullions	9
	Pair of Doors	9
Options	Handing	12
	Options	12
How to Order	Ordering Guide	13
Wide Stile Exit Devices	9100/F9100 Concealed Vertical Rod	14
	9300/F9300 Wide Stile Rim	18
	9400/F9400 Surface Vertical Rod	22
	9500/F9500 Mortise Lock	26
	Accessories	29
	Optional Electronic Functions	30
	DE9000 Certification & Specifications	31
	DE9000 Delayed Egress Features	32
	Auxiliary Equipment	33
	Trim Options	33
	Lever & Knob Styles	34
	Wide Stile Y Escutcheon Trim	35
	Sectional Trim	36
	3" Wide Plate Trim	37
	2" Wide Stile Plate Trim	38
	Wide Stile Pull Trim	39
	Wide Stile Trim	40
	Cylinder Specifications	49
	Mullions	50
Narrow Stile Exit Devices	9600/F9600 Concealed Vertical Rod	52
	9700/F9700 Narrow Stile Rim	54
	9800/F9800 Surface Vertical Rod	56
	Accessories	58
	Optional Electronic Functions	59
	DE9000 Certification & Specifications	60
	DE9000 Delayed Egress Features	61
	Auxiliary Equipment	62
	Trim Options	62
	Lever & Knob Styles	63
	Narrow Stile Z Trim	64
	Narrow Stile Pull Trim	65
	Narrow Stile Trim	66
	Cylinder Specifications	69
	Mullions	69

DORMA USA quality and environmental management systems in Reamstown, PA and Steeleville, IL are certified to ISO 9001:2008 and ISO 14001:2004.

DORMA 9000 SERIES PREMIUM EXIT DEVICES

Premium exit devices available in wide or narrow stile for high impact applications such as schools, universities, and other institutional or commercial buildings.

DORMA 9000 Series exit devices reliably secure egress doors in compliance with all applicable fire/life safety code requirements. Wide and narrow stile exit devices for high-impact applications are available in rim, mortise, and surface or concealed rod configurations in both fire and panic-rated versions. The DE9000 Series delayed egress exit device is available when security and safety are a concern.

9000 Series exit devices offer the specifier a selection of true architectural finishes and a full complement of electrified options, including alarmed exit, delayed egress exit, electric latch retraction, and device monitoring.

Wide Stile
The DORMA 9000 Series wide stile exit device features a heavy-duty cast chassis for superior durability, while the smooth reduced projection touchbar assembly minimizes catch hazards. The partial length touchpad permits field installation of options such as cylinder dogging and exit alarm. A full complement of free wheeling lever trim is available in a wide range of architectural finishes.

Narrow Stile
DORMA 9000 Series narrow stile exit device with a shortened touchbar is the ultimate solution when narrow stile doors require an exit device.

The heavy-duty cast chassis design permits installation on narrow stile doors where a standard device may not fit. The smooth projection touchbar assembly minimizes catch hazards. The partial length touchpad permits field installation of options such as cylinder dogging and exit alarm.

The DORMA 9000 Series narrow stile exit devices are available in a wide range of models and offer a full complement of free wheeling lever trim to meet most narrow stile door applications.

Delayed Egress
The DE9000 Series delayed egress exit device maximizes features for uncompromising security and safety and offers ease of installation, job site function flexibility, and years of trouble free service.

The DE9000 is intended for low level egress security applications such as healthcare facilities, assisted living centers, hospitals, or retail. For applications requiring higher levels of egress security such as juvenile detention centers, developmentally challenged adult incarceration facilities, or other types of more challenging environments, it is recommended that a standard exit device be used in conjunction with DORMA's EMDE Series delayed egress magnetic door locks.

- Wide stile touchbar and rail, chassis, latch bolt covers, and end cap are fabricated and finished in true base metal. Narrow stile is the same except chassis cover is always brass and finished to match device.
- End cap for touchbar assembly furnished in complementary finish.
- Some models handed depending on outside operating trim and function.
- Most devices easily field-reversible.
- Fasteners provided for metal and wood door applications.
- Free wheeling, vandal-resistant trim standard.

DORMA 9000 SERIES WIDE & NARROW STILE EXIT DEVICES

Certification

- Certified/listed to ANSI/BHMA 156.3, Grade 1 for exit devices.
- U.L. and C.U.L. listed under their continuing reinspection programs and conforms to standard U.L. 10C positive pressure testing.
- Complies with NFPA 101 life safety code. Fire rated devices comply with NFPA 80 fire doors and windows.
- Devices, trim, pulls, and levers comply with the Americans for Disabilities Act, 1994, and ANSI 117.1-2003 for accessible and usable buildings and facilities.
- Contributes to U.S. Green Building Council, LEED MR Credits 2.1, 4.1, 4.2 and 5.1.
- Listed with the California Department of Forestry and Fire Protection, Office of the State Fire Marshal (wide stile devices only).
- Hurricane-code approved to Miami-Dade County Florida and Florida State Building Code acceptance (9300, 9400, 9500, 9700).

Specifications

All devices to have heavy-duty cast chassis.

All device touchbar, rail, and cover assemblies shall be constructed of heavy gauge solid wrought materials for true architectural finishes or color coated finishes.

The partial-length touchpad assembly accommodates field installation of options such as cylinder dogging and exit alarm. Non-labeled units to have hex-key dogging standard. Fire rated versions available for labeled applications.

Surface vertical rod devices shall have pullman type top latch bolts and round slidebolt bottom latches.

All devices to have deadlocking latch bolts with 3/4" throw.

All units shall offer a full range of free wheeling operational trim, except mortise devices.

All units shall offer optional rigid and clutch-style trim, where applicable.

All devices to be furnished with appropriate mounting hardware including both wood and machine screws, as well as sex nuts where required.

Optional Specifications

Non-labeled devices to have cylinder dogging. Mortise cylinder included. Specify **CD**.

All surface/concealed vertical rod devices to have pullman type bottom latch bolt. Specify **PB**.

All surface/concealed vertical rod devices to have extended top rod up to 10'. Specify **ETR** for 8', 9', or 10'.

All surface/concealed vertical rod devices to be furnished less bottom rod. Specify **LB**.

Devices to have motorized latch bolt retraction to provide remote access from the secure side of door. Can also be used to electrically dog/hold the exit push bar in a retracted position during non-secure hours (latch bolt is retracted). Specify **MLR**. (**MLR** is powered by the DORMA PS610 or PS532 power supply.)

Devices to have electric latch bolt retraction to provide remote access from the secure side of door. Can also be used in conjunction with low energy/automatic door operator. Specify **ES. (ES must be powered by PS-501 power supply and use ES-105 power transfer)**

Devices to have electric latch retraction option for battery back-up power supply (requires PS406BB or PS426BB power supply and ES105 power transfer). Specify **ESB**.

Devices to have a controlled delayed egress while simultaneously sounding a local and remote audible alarm. After the delay time has elapsed, unrestricted emergency egress is available. Specify **DE**. (Not available with 9400 or 9800.)

Devices to have a latch monitor to report the latch bolt status. Specify **LM**.

Devices to be furnished with two switches in the touchbar to provide notification when touchbar is depressed. Specify **MS**.

Devices to have latch monitor with monitor switches in touchbar. Specify **LM/MS**.

Devices to have latch monitor with monitor switches and a bypass to permit authorized exit. Specify **LM/MS BP**.

Devices to have one of the following exit alarm options: battery-powered exit alarm (**BPA**), battery-powered exit alarm with a 4-minute reset (**BPAR**), or direct hard-wired exit alarm (**DWA**).

Devices to use a vision lite shim kit to raise the device from the door surface to accommodate glass light molding. Specify **GK9000** (wide stile) or **GK9200** (narrow stile).

All devices for labeled wood or composite doors to be furnished with sex bolts. Specify **SNB**.

All concealed vertical rod devices installed in aluminum doors to be furnished with appropriate brackets for aluminum door applications. **See page 12**.

All devices to use tamper-resistant security screws. Specify **TX**.

All devices to be furnished with rigid trim. Specify **R** after trim.

All devices to be furnished with clutch-style lever trim. Specify **C** after lever trim.

Finishes

Architectural Finishes

- Brass: 605 (Bright) or 606 (Satin)
- Bronze: 611 (Bright), 612 (Satin), or 613 (Oxidized Satin)
- Nickel: 619 (Satin)
- Black: 693
- Chrome: 625 (Bright) or 626 (Satin)
- Stainless Steel: 630 (Satin)

Powder Coated Finishes

- Aluminum: 689
- Bronze: 691 (Dull) or 695 (Dark Duranodic)
- Black: 693
- Gold: 696
- Clear Powder Coating: Specify **P**
- Anti-Microbial: Specify **AM**

Warranty

For details, refer to **DORMA Limited Warranty** on our website at **go.dorma.com/terms.**

NOTES:

* No dogging available.

** The 9000 Series narrow stile bar lengths are designed for use on narrow stile aluminum entrance doors with a 1/2" blade stop frame. Other applications may require field cutting the bar.

9000 Series Data & Features	Model 9100	Model 9300	Model 9400	Model 9500	Model 9600	Model 9700	Model 9800
Wide Stile Exit Device	•	•	•	•	NA	NA	NA
Narrow Stile Exit Device	NA	NA	NA	NA	•	•	•
U.L. Listed for Hazard	•	•	•	•	•	•	•
U.L. Listed for Labeled Fire Doors (prefix F) *	○	○	○	○	○	○	○
Extended Life Cycle Testing	•	•	•	•	•	•	•
Latch Bolt Load Rated	NA	•	NA	NA	NA	•	NA
Size **A** Doors (34"–48") (touchpad 24-5/8")	○	○	○	○	NA	NA	NA
Size **B** Doors (28"–36") (touchpad 18-5/8") Default Wide	•	•	•	•	NA	NA	NA
Size **C** Doors (25"–30") (touchpad 15-5/8")	○	○	○	○	NA	NA	NA
Size **D*** Doors (25"–30", can be field cut 24") (touchpad 15-7/8")	○	○	○	○	NA	NA	NA
Size **AA** Doors (32-1/2"–48")** (touchpad 24-5/8")	NA	NA	NA	NA	○	○	○
Size **BB** Doors (27"–36")** (touchpad 18-5/8") Default Narrow	NA	NA	NA	NA	•	•	•
Size **CC** Doors (23-1/2"–36")** (touchpad 15-5/8")	NA	NA	NA	NA	○	○	○
Door Height up to 7' Default Vertical Rod	•	NA	•	NA	•	NA	•
Door Height up to 8' (Specify 8')	○	NA	○	NA	○	NA	○
Door Height up to 10' (over 8', specify actual door height and ETR)	○	NA	○	NA	○	NA	○
Door Thickness 1-3/4" to 2-1/4"	•	•	•	•	•	•	•
Door Thickness 2-1/4" to 3-1/2"	NA	NA	NA	NA	○	○	○
Device Non-Handed	NA	•	NA	NA	NA	NA	NA
Device Handed but Field Reversible	•	NA	•	NA	•	NA	•
Device Handed, Not Reversible	NA	NA	NA	•	NA	•	NA
Hex Key Dogging (non-listed units only)	•	•	•	•	•	•	•
Cylinder Dogging (non-listed units only)	○	○	○	○	○	○	○
Round Bottom Slide Bolt (specify SB)	•	NA	•	NA	•	NA	•
Deadlocking Pullman Type Bottom Latch Bolt (specify PB)	○	NA	○	NA	○	NA	○
Less Bottom Rod (specify LB)	○	NA	○	NA	○	NA	○
Full Length Touch Bar (Not Available DE)	○	○	○	○	○	○	○
Motorized Latch Bolt Retraction (specify MLR)	○	○	○	○	○	○	○
Electric Latch Bolt Retraction (specify ES)	○	○	○	NA	○	○	○
Monitor Switch in Touchbar (specify MS)	○	○	○	○	○	○	○
Latch Bolt Monitor (specify LM)	○	○	○	○	○	○	○
Latch Monitor/Monitor Switch (specify LM/MS)	○	○	○	○	○	○	○
Latch Monitor/Monitor Switch with Bypass (specify LM/MS BP)	○	○	○	○	○	○	○
Exit Alarm (specify BPA, BPAR or DWA)	○	○	○	○	○	○	○
Delayed Egress 15 sec (specify DE)	○	○	NA	○	○	○	NA
Clutch Style Lever Trim (specify C)	○	○	○	○	○	○	○
Rigid Lever Trim (specify R)	○	○	○	○	○	○	○
Magnetic Dogging (specify MD)	○	○	○	○	○	○	○
Motorized Dogging (specify MLR)	○	○	○	○	○	○	○
Glass Lite Shim Kit (wide stile, specify GK9000)	○	○	○	○	NA	NA	NA
Glass Lite Shim Kit (narrow stile, specify GK9200)	NA	NA	NA	NA	○	○	○
Security Screws (specify TX)	○	○	○	○	○	○	○
Sex Nuts (Specify SNB/Quantity)	○	○	○	○	○	○	○
Aluminum Door Latch Brackets. Specify ALD (9100/9600) or NS (9600)	•	NA	NA	NA	•	NA	NA
Hurricane Code Rated (specify HC)	NA	○	○	○	NA	○	○

• – Standard Feature ○ – Optional Feature NA – Not Applicable * ** See **NOTES** on previous page.

ANSI FUNCTIONS

ANSI Function	Function Description	Type 1 Rim Exit Device	Type 2 Surface Vertical Rod Exit Device
01	Exit Only – No Trim	**9300 or F9300**	**9400 or F9400**
02	Entrance by trim when actuating bar is locked down.	**9300 × (trim)** V102 / V302 PTT02 / PRT02 Y*x*02R / YK02R	**9400 × (trim)** V102 / V302 PTT02 / PRT02 Y*x*02R / YK02R
03	Entrance by trim when latch bolt is retracted by key. Key removable only when locked.	**9300 or F9300 × (trim)** VO03 / V103 / V303, YO03 NPT03 / PTT03 / PRT03 Y*x*02R / YK02R 9*x*03J / 9*x*03 / 9K03 / 9K03J POF03HDA	**9400 or F9400 × (trim)** VO03 / V103 / V303, YO03 NPT03 / PTT03 / PRT03 Y*x*03R / YK03R 9*x*03 / 9*x*03J / 9K03 / 9K03J
04	Entrance by trim when latch bolt is retracted by key or set in retracted position by key.	**CD9300 × (trim)** VO03 / V103 / V303, YO03 NPT03 / PTT03 / PRT03 Y*x*03R / YK03R 9*x*03 / 9*x*03J /9K03 / 9K03J POF03HDA	**CD9400 × (trim)** VO03 / V103 / V303, YO03 NPT03 / PTT03 / RT03 Y*x*03R / YK03R 9*x*03 / 9*x*03J / 9K03 / 9K03J
05	Entrance by thumbpiece. Key locks or unlocks thumbpiece.	**9300 or F9300 × (trim)** HTT05/HRT05	**9400 or F9400 × (trim)** HTT05/HRT05
06	Entrance by thumbpiece only when released by key. Key removable only when locked.	**9300 or F9300 × (trim)** HTT06/HRT06	**9400 or F9400 × (trim)** HTT06/HRT06
08	Entrance by knob or lever. Key locks or unlocks knob or lever.	**9300 or F9300 × (trim)** Y*x*08 / YK08 Y*x*08C 9*x*08 / 9*x*08J / 9K08 / 9K08J	**9400 or F9400 × (trim)** Y*x*08 / YK08 Y*x*08C 9*x*08 / 9*x*08J / 9K08 / 9K08J
08x08	Entrance by lever. OS or IS key locks or unlocks lever.	F**9300 × (trim)** Y*x*08x08 / YK08x08	—
09	Entrance by knob or lever only when released by key. Key removable only when locked.	**9300 or F9300 × (trim)** Y*x*09 / YK09 Y*x*09C	**9400 or F9400 × (trim)** Y*x*09 / YK09 Y*x*0C
22	Entrance by thumbpiece (no cylinder). Trim always active.	**9300 or F9300 × (trim)** HRT22/HTT22	**9400 or F9400 × (trim)** HRT22/HTT22
23	Entrance by knob or lever (no cylinder). Trim always active.	**9300 or F9300 × (trim)** Y*x*23 / YK23 9*x*23 / 9K23	**9400 or F9400 × (trim)** Y*x*23 / YK23 9*x*23 / 9K23

ANSI Function	Function Description	Type 3 Mortise Exit Device	Type 7/8 Wood/Metal Door Concealed Vertical Rod Exit Device
01	Exit Only – No Trim	**9500 or F9500**	**9100 or F9100**
02	Entrance by trim when actuating bar is locked down.	**9500 × (trim)** V102M / V302M PTT02M / PRT02M Y*x*02R / YK02R	**9100 × (trim)** V102CV / V302CV PTT02CV / PRT02CV Y*x*02R / YK02R
03	Entrance by trim when latch bolt is retracted by key. Key removable only when locked.	**9500 or F9500 × (trim)** VO03M / V103M / V303M, YO03M NPT03M / PTT03M / PRT03M Y*x*03MR / YK03MR	**9100 or F9100 × (trim)** VO03CV / V103CV / V303CV, YO03 NPT03CV / PTT03CV / PRT03CV Y*x*03R / YK03R 9*x*03 / 9*x*03J / 9K03 / 9K03J

NOTE: When a trim designation includes an *x* (such as Y*x*23), replace *x* with the letter or number assigned to the chosen lever style. For example, YR23 specifies lever style R. See page 34 for details.

ANSI Function	Function Description	Type 3 Mortise Exit Device	Type 7/8 Wood/Metal Door Concealed Vertical Rod Exit Device
04	Entrance by trim when latch bolt is retracted by key or set in retracted position by key.	**CD9500 × (trim)** VO03M / V103M / V303M, YO03M NPT03M / PTT03M / PRT03M Y*x*03MR / YK03MR	**CD9100 × (trim)** VO03CV / V103CV / V303CV, YO03 NPT03CV / PTT03CV / PRT03CV Y*x*03R / YK03R 9*x*03 / 9*x*03J / 9K03 / 9K03J
05	Entrance by thumbpiece. Key locks or unlocks thumbpiece.	**9500 or F9500 × (trim)** HTT05M / HRT05M	**9100 or F9100 × (trim)** HTT05CV / HRT05CV
06	Entrance by thumbpiece only when released by key. Key removable only when locked.	_____	**9100 or F9100 × (trim)** HTT06CV / HRT06CV
08	Entrance by knob or lever. Key locks or unlocks knob or lever.	**9500 or F9500 × (trim)** Y*x*08M / YK08M Y*x*08MC	**9100 or F9100 × (trim)** Y*x*08 / YK08 Y*x*08C 9*x*08 / 9R08J / 9K08 / 9K08J
09	Entrance by knob or lever only when released by key. Key removable only when locked.	_____	**9100 or F9100 × (trim)** Y*x*09 / YK09 Y*x*09C
22	Entrance by thumbpiece (no cylinder). Trim always active.	**9500 or F9500 × (trim)** HRT22M / HTT22M	**9100 or F9100 × (trim)** HRT22CV / HTT22CV
23	Entrance by knob or lever (no cylinder). Trim always active.	**9500 or F9500 × (trim)** Y*x*23M / YK23M	**9100 or F9100 × (trim)** Y*x*23 / YK23

ANSI Function	Function Description	Type 4 Rim Exit Device	Type 5 Surface Vertical Rod Exit Device	Type 6 Wood/Metal Door Concealed Vertical Rod Device
01	Exit Only – No Trim	**9700 or F9700**	**9800 or F9800**	**9600 or F9600**
02	Entrance by trim when actuating bar is locked down.	**9700 × (trim)** OP02 ZP02 Z *x* 02R / ZK02R	**9800 × (trim)** OP02 ZP02 Z *x* R02R / ZK02R	**9600 × (trim)** OP02 ZP02 Z *x* 02R / ZK02R
03	Entrance by trim when latch bolt is retracted by key. Key removable only when locked.	**9700 or F9700 × (trim)** ZO03 ZP03 Z*x* 03R / ZK03R	**9800 or F9800 × (trim)** ZO03 ZP03 Z *x* 03R / ZK03R	**9600 or F9600 × (trim)** ZO03 ZP03 Z *x*0 3R / ZK03R
04	Entrance by trim when latch bolt is retracted by key or set in retracted position by key.	**CD9700 × (trim)** ZO03 ZP03 Z *x* 03R / ZK03R	**CD9800 × (trim)** ZO03 ZP03 Z *x* 03R / ZK03R	**CD9600 × (trim)** ZO03 ZP03 Z *x* 03R / ZK03R
08	Entrance by knob or lever. Key locks or unlocks knob or lever.	**9700 or F9700 × (trim)** Z *x* 08 / Z *x* 08C / ZK08	**9800 or F9800 × (trim)** Z *x* 08 / Z *x* 08C / ZK08	**9600 or F9600 × (trim)** Z *x* 08 / Z *x* 08C / ZK08
09	Entrance by knob or lever only when released by key. Key removable only when locked.	**9700 or F9700 × (trim)** Z *x* 09 / Z *x* 09C / ZK09	**9800 or F9800 × (trim)** Z *x* 09 / Z *x* 09C / ZK09	**9600 or F9600 × (trim)** Z *x* 09 / Z *x* 09C / ZK09
11	Entrance by thumbturn. Key locks or unlocks thumbturn.	**9700 or F9700 × (trim)** ZP11	**9800 or F9800 × (trim)** ZP11	**9600 or F9600 × (trim)** ZP11
12	Entrance by thumbturn when unlocked by key. Key removable only when trim is locked.	**9700 or F9700 × (trim)** ZP12	**9800 or F9800 × (trim)** ZP12	**9600 or F9600 × (trim)** ZP12

NOTE: When a trim designation includes an *x* (such as Z*x*23), replace *x* with the letter or number assigned to the chosen lever style. For example, ZR23 specifies lever style R. See page 63 for details.

ANSI Function	Function Description	Type 4 Rim Exit Device	Type 5 Surface Vertical Rod Exit Device	Type 6 Wood/Metal Door Concealed Vertical Rod Device
23	Entrance by knob or lever (no cylinder). Trim always active.	**9700 or F9700 × (trim)** Z *x* 23 / ZK23	**9800 or F9800 × (trim)** Z *x* 23 / ZK23	**9600 or F9600 × (trim)** Z *x* 23 / ZK23
25	Entrance by thumbturn and pull (no cylinder). Thumbturn always active.	**9700 or F9700 × (trim)** ZP25	**9800 or F9800 × (trim)** ZP25	**9600 or F9600 × (trim)** ZP25

NOTE: When a trim designation includes an *x* (such as Z*x*23), replace *x* with the letter or number assigned to the chosen lever style. For example, ZR23 specifies lever style R. See pages 63 for details.

APPLICATIONS & LISTINGS

Model	Door Material	Max. Door Opening	Door Ratings	Applications
Single Doors				
Concealed Vertical Rod **9100**	Wood/Steel	4' × 10'	Devices are panic listed only	Concealed (2) point latching
Concealed Vertical Rod **F9100**	Steel	4' × 10'	3 Hour	
	Wood	4' × 10'	1-1/2 Hour	
Concealed Vertical Rod (Less Bottom Rod) **9100 LB**	Wood/Steel	4' × 10'	Devices are panic listed only	Concealed (1) point latching
Concealed Vertical Rod (Less Bottom Rod) **F9100 LB**	Steel	4' × 10'	3 Hour	
	Wood	4' × 10'	1-1/2 Hour	
Rim **9300**	Wood/Steel	4' × 8'	Devices are panic listed only	Surface applied (1) point latching
Rim **F9300**	Steel	4' × 8'	3 Hour	
	Wood	4' × 8'	1-1/2 Hour	
Surface Vertical Rod **9400**	Wood/Steel	4' × 10'	Devices are panic listed only	Surface applied (2) point latching
Surface Vertical Rod **F9400**	Steel	4' × 10'	3 Hour	
	Wood	4' × 10'	1-1/2 Hour	
Surface Vertical Rod (Less Bottom Rod) **9400 LB**	Wood/Steel	4' × 10'	Devices are panic listed only	Surface applied (1) point latching
Surface Vertical Rod (Less Bottom Rod) **F9400 LB**	Steel	4' × 10'	3 Hour	
	Wood	4' × 10'	1-1/2 Hour	
Mortise **9500**	Wood/Steel	4' × 10'	Devices are panic listed only	Mortised (1) point latching
Mortise **F9500**	Steel	4' × 10'	3 Hour	
	Wood	4' × 8'	1-1/2 Hour	
	Wood	4' × 10'	*1/3 Hour	

* Designates minimum U.L. listing for wood doors over 8' in height. Listings for 90 minutes or greater may be applicable through other listing agencies dependent upon the wood door manufacturer's current listing. Contact wood door manufacturer for details.

Model	Door Material	Max. Door Opening	Door Ratings	Applications
Single Doors (continued)				
Concealed Vertical Rod **9600**	Wood/Steel	4' × 10'	Devices are panic listed only	Concealed (2) point latching 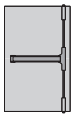
Concealed Vertical Rod **F9600**	Steel	4' × 10'	3 Hour	
	Wood	4' × 10'	1-1/2 Hour	
Concealed Vertical Rod (Less Bottom Rod) **9600 LB**	Wood/Steel	4' × 10'	Devices are panic listed only	Concealed (1) point latching 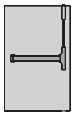
Concealed Vertical Rod (Less Bottom Rod) **F9600 LB**	Steel	4' × 10'	3 Hour	
	Wood	4' × 10'	1-1/2 Hour	
Rim **9700**	Wood/Steel	4' × 8'	Devices are panic listed only	Surface applied (1) point latching 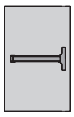
Rim **F9700**	Steel	4' × 8'	3 Hour	
	Wood	4' × 8'	1-1/2 Hour	
Surface Vertical Rod **9800**	Wood/Steel	4' × 10'	Devices are panic listed only	Surface applied (2) point latching 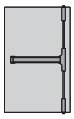
Surface Vertical Rod **F9800**	Steel	4' × 10'	3 Hour	
	Wood	4' × 10'	1-1/2 Hour	
Surface Vertical Rod (Less Bottom Rod) **9800 LB**	Wood/Steel	4' × 10'	Devices are panic listed only	Surface applied (1) point latching 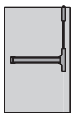
Surface Vertical Rod (Less Bottom Rod) **F9800 LB**	Steel	4' × 10'	3 Hour	
	Wood	4' × 10'	1-1/2 Hour	
Pair of Doors with Removable Mullion				
Rim × Rim **9300 × 9300**	Wood/Steel	8' × 8'	Devices are panic listed only	(2) independent active doors with removable mullion (1) point latching 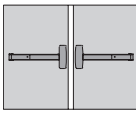
Rim × Rim **F9300 × F9300**	Steel	8' × 8'	3 Hour	
	Wood	8' × 8'	1-1/2 Hour	
Rim × Rim **9700 × 9700**	Wood/Steel	8' × 8'	Devices are panic listed only	(2) independent active doors with removable mullion (1) point latching 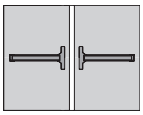
Rim × Rim **F9700 × F9700**	Steel	8' × 8'	1-1/2 Hour	
	Wood	8' × 8'	1-1/2 Hour	
Pair of Doors				
Concealed Vertical Rod **9100 × 9100**	Wood/Steel	8' × 10'	Devices are panic listed only	(2) independent doors with (2) point latching 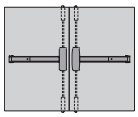
Concealed Vertical Rod **F9100 × F9100**	Steel	8' × 10'	1-1/2 Hour[2]	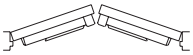 (swing same direction)
	Wood	8' × 8'	1-1/2 Hour	
	Wood	8' × 10'	1-1/2 Hour	
Concealed Vertical Rod **9100 × 9100**	Wood/Steel	8' × 10'	Devices are panic listed only	(2) independent doors with (2) point latching 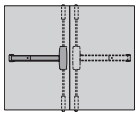
Concealed Vertical Rod **F9100 × F9100**	Steel	8' × 10'	3 Hour	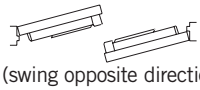 (swing opposite direction)
	Wood	8' × 8'	1-1/2 Hour	
	Wood	8' × 10'	1-1/2 Hour	

Model	Door Material	Max. Door Opening	Door Ratings	Applications
Pair of Doors (continued)				
Concealed Vertical Rod (Less Bottom Rod) **9100 LB × 9100 LB**	Wood/Steel	8' × 10'	Devices are panic listed only	(2) independent doors with (1) point latching (swing same direction)
Concealed Vertical Rod (Less Bottom Rod) **F9100 LB × F9100 LB**	Steel	8' × 10'	1-1/2 Hour[1,2]	
	Wood	8' × 10'	1-1/2 Hour[1]	
Concealed Vertical Rod (Less Bottom Rod) **9100 LB × 9100 LB**	Wood/Steel	8' × 10'	Devices are panic listed only	(2) independent doors with (1) point latching (swing opposite direction)
Concealed Vertical Rod (Less Bottom Rod) **F9100 LB × F9100 LB**	Steel	8' × 10'	3 Hour[1]	
	Wood	8' × 10'	1-1/2 Hour[1]	
Surface Vertical Rod **9400 × 9400**	Wood/Steel	8' × 10'	Devices are panic listed only	(2) independent doors with (2) point latching (swing same direction)
Surface Vertical Rod **F9400 × F9400**	Steel	8' × 10'	1-1/2 Hour[2]	
	Wood	8' × 8'	1-1/2 Hour	
	Wood	8' × 10'	1-1/2 Hour	
Surface Vertical Rod **9400 × 9400**	Wood/Steel	8' × 10'	Devices are panic listed only	(2) independent doors with (2) point latching (swing opposite direction)
Surface Vertical Rod **F9400 × F9400**	Steel	8' × 10'	3 Hour	
	Wood	8' × 8'	1-1/2 Hour	
	Wood	8' × 10'	1-1/2 Hour	
Surface Vertical Rod (Less Bottom Rod) **9400 LB × 9400 LB**	Wood/Steel	8' × 10'	Devices are panic listed only	(2) independent doors with (1) point latching (swing same direction)
Surface Vertical Rod (Less Bottom Rod) **F9400 LB × F9400 LB**	Steel	8' × 10'	1-1/2 Hour[1,2]	
	Wood	8' × 10'	1-1/2 Hour[1]	
Surface Vertical Rod (Less Bottom Rod) **9400 LB × 9400 LB**	Wood/Steel	8' × 10'	Devices are panic listed only	(2) independent doors with (1) point latching (swing opposite direction)
Surface Vertical Rod (Less Bottom Rod) **F9400 LB × F9400 LB**	Steel	8' × 10'	3 Hour[1]	
	Wood	8' × 10'	1-1/2 Hour[1]	
Rim × Surface Vertical Rod **9300 × 9400**	Wood/Steel	8' × 8'	Devices are panic listed only	(2) independent doors with (1) and (2) point latching (swing same direction)
Rim × Concealed Vertical Rod **9300 × 9100**	Wood/Steel	8' × 8'	Devices are panic listed only	(2) independent doors with (1) and (2) point latching (swing same direction)
Mortise × Surface Vertical Rod **9500 × 9400**	Wood/Steel	8' × 10'	Devices are panic listed only	(2) independent doors with (1) and (2) point latching (swing same direction)
Mortise × Surface Vertical Rod **F9500 × F9400**	Steel	8' × 10'	3 Hour	
	Wood	8' × 8'	1-1/2 Hour	
	Wood	8' × 10'	1-1/2 Hour	

Model	Door Material	Max. Door Opening	Door Ratings	Applications
Pair of Doors (continued)				
Mortise × Concealed Vertical Rod **9500 × 9100**	Wood/Steel	8' × 10'	Devices are panic listed only	(2) independent doors with (1) and (2) point latching (swing same direction)
Mortise × Concealed Vertical Rod **F9500 × F9100**	Steel	8' × 10'	3 Hour	
	Wood	8' × 8'	1-1/2 Hour	
	Wood	8' × 10'	1-1/2Hour	
Concealed Vertical Rod **9600 × 9600**	Wood/Steel	8' × 10'	Devices are panic listed only	(2) independent doors with (2) point latching (swing same direction)
Concealed Vertical Rod **F9600 × F9600**	Steel	8' × 10'	1-1/2 Hour[2]	
	Wood	8' × 8'	1-1/2 Hour	
	Wood	8' × 10'	1-1/2 Hour[3]	
Concealed Vertical Rod **9600 × 9600**	Wood/Steel	8' × 10'	Devices are panic listed only	(2) independent doors with (2) point latching (swing opposite direction)
Concealed Vertical Rod **F9600 × F9600**	Steel	8' × 10'	1-1/2 Hour	
	Steel	8' × 8'	1-1/2 Hour	
	Wood	8' × 10'	1-1/2 Hour[3]	
Concealed Vertical Rod (Less Bottom Rod) **9600 LB × 9600 LB**	Wood/Steel	8' × 10'	Devices are panic listed only	(2) independent doors with (1) point latching (swing same direction)
Concealed Vertical Rod (Less Bottom Rod) **F9600 LB × F9600 LB**	Steel	8' × 10'	1-1/2 Hour[1,2]	
	Wood	8' × 10'	1-1/2 Hour[1,3]	
Concealed Vertical Rod (Less Bottom Rod) **9600 LB × 9600 LB**	Wood/Steel	8' × 10'	Devices are panic listed only	(2) independent doors with (1) point latching (swing opposite direction)
Concealed Vertical Rod (Less Bottom Rod) **F9600 LB × F9600 LB**	Steel	8' × 10'	3 Hour[1]	
	Wood	8' × 10'	1-1/2 Hour[1,3]	
Surface Vertical Rod **9800 × 9800**	Wood/Steel	8' × 10'	Devices are panic listed only	(2) independent doors with (2) point latching (swing same direction)
Surface Vertical Rod **F9800 × F9800**	Steel	8' × 10'	1-1/2 Hour[2]	
	Wood	8' × 8'	1-1/2 Hour	
	Wood	8' × 10'	1-1/2 Hour[3]	
Surface Vertical Rod **9800 × 9800**	Wood/Steel	8' × 10'	Devices are panic listed only	(2) independent doors with (2) point latching (swing opposite direction)
Surface Vertical Rod **F9800 × F9800**	Steel	8' × 10'	3 Hour	
	Wood	8' × 8'	1-1/2 Hour	
	Wood	8' × 10'	1-1/2 Hour[3]	
Surface Vertical Rod (Less Bottom Rod) **9800 LB × 9800 LB**	Wood/Steel	8' × 10'	Devices are panic listed only	(2) independent doors with (1) point latching (swing same direction)
Surface Vertical Rod (Less Bottom Rod) **F9800 LB × F9800 LB**	Steel	8' × 10'	1-1/2 Hour[1,2]	
	Wood	8' × 10'	1-1/2 Hour[3]	
Surface Vertical Rod (Less Bottom Rod) **9800 LB × 9800 LB**	Wood/Steel	8' × 10'	Devices are panic listed only	(2) independent doors with (1) point latching (swing opposite direction)
Surface Vertical Rod (Less Bottom Rod) **F9800 LB × F9800 LB**	Steel	8' × 10'	3 Hour[1]	
	Wood	8' × 10'	1-1/2 Hour[1,3]	

Model	Door Material	Max. Door Opening	Door Ratings	Applications	
Pair of Doors (continued)					
Rim × Surface Vertical Rod **9700 × 9800**	Wood/Steel	8' × 8'	Devices are panic listed only	(2) independent doors with (1) and (2) point latching (swing same direction)	
Rim × Concealed Vertical Rod **9700 × 9600**	Wood/Steel	8' × 8'	Devices are panic listed only	(2) independent doors with (1) and (2) point latching (swing opposite direction)	

NOTES: 1. Fire rated pairs using **Less Bottom Rod** devices require the supplied door popper. With the absence of bottom rods, the popper holds the bottoms of the doors together in the event of fire.

2. Pairs of doors swinging in the same direction cannot use two vertical rod exit devices with an overlapping astragal as pairs of doors rated greater than 1-1/2 hours require a steel overlapping astragal. Currently, no door manufacturers offer over 90 minutes with doors swinging in the same direction.

3. Consult wood door manufacturers for current U.L. listings.

HANDING

Right-Hand Reverse Bevel (RHR)

Outside

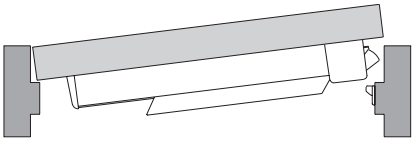

Push Side

Left-Hand Reverse Bevel (LHR)

Outside

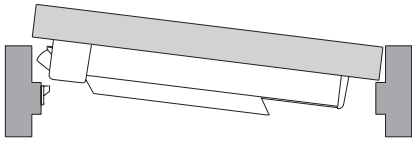

Push Side

OPTIONS

BPA	Battery Powered Exit Alarm	**LM/MS**	Latch Monitor/Monitor Switch
BPAR	Battery Powered Exit Alarm, (4) minute reset	**LM/MS BP**	Latch Monitor/Monitor Switch with Bypass
DWA	Direct Wired Exit Alarm	**DE**	Delayed Egress, 15 sec (9100, 9300, 9500, 9600, 9700)
CD	Cylinder Dogging	**DE30**	Delayed Egress, 30 sec (9100, 9300, 9500, 9600, 9700) requires special approval from authority having jurisdiction)
MLR	Motorized Latch Retraction / Electric Dogging	**DECBC**	Delayed Egress, CBC compliant
ES	Latch Retraction (9100, 9300, 9400, 9600, 9700, 9800)	**SB**	Slide Bolt (9100, 9400, 9600, 9800)
ETR	Top Rod Extension (9100, 9400, 9600, 9800)	**PB**	Pullman Bottom Latch, vertical rod only (9100, 9400, 9600, 9800)
GK9000	Vision Lite Shim Kit (Wide Stile)	**SNB**	Sex Nuts, specify quantity
GK9200	Vision Lite Shim Kit (Narrow Stile)	**ALD**	Wide Stile Aluminum Door Brackets (9100, 9600)
LB	Less Bottom Rod (9100, 9400, 9600, 9800)	**NS**	2-1/8" Narrow Stile Aluminum Door Bracket (9600 only)
LM	Latch Monitor	**WD**	Narrow Stile Wood or Hollow Steel Door Bracket (9600 only)
MD	Magnetic Dogging	**TX**	Security Screws
MS	Monitor Switch	**FL**	Full Length Touch Bar

HOW TO ORDER 9000 SERIES EXIT DEVICE

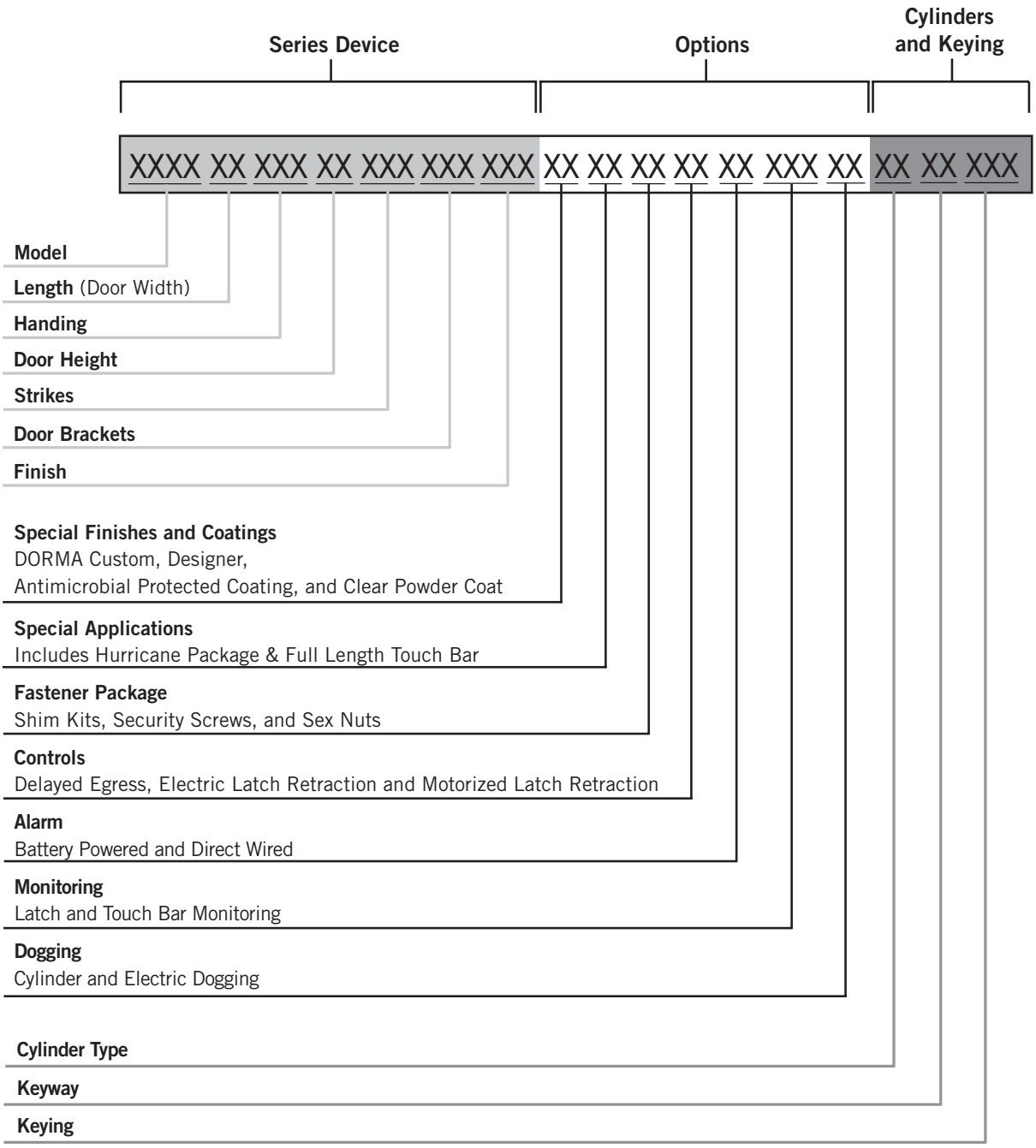

Patented Key Control

D100 is the keyway for DORMA's patented **SKC** serialized key control system. **SKC** is internet based and provides added layers of security. For more information, contact your local DORMA sales representative or DORMA Technical Service at 800-523-8483.

9100/F9100 WIDE STILE CONCEALED VERTICAL ROD EXIT DEVICES

The 9100 Concealed Vertical Rod and the F9100 Series Concealed Vertical Rod Fire Exit Devices are excellent choices where barrier-free codes, aesthetics, or the potential for vandalism require concealment of the vertical rod. They are panic and fire-listed (three-hour steel fire door applications) and feature a simplified adjustment mechanism that provides ease of installation and reduced service requirements.

Specify Door Brackets
ALD – Wide stile aluminum

Model	Function	Operation	Trim Model
9100 F9100	01	Exit Only (no trim)	
9100 F9100	DT	Dummy Trim	VODTCV NPTDTCV YODT
9100	02	Entrance by trim when actuating bar is locked down.	V102CV V302CV PTT02CV PRT02CV YP02
9100 F9100	03	Entrance by trim when latch bolt is retracted by key. Key removable only when locked.	VO03CV V103CV V303CV NPT03CV PTT03CV PRT03CV YO03 YP03
CD9100	04	Entrance by trim when latch bolt is retracted by key or set in a retracted position by key.	VO03CV V103CV V303CV NPT03CV PTT03CV PRT03CV YO03
9100 F9100	05	Entrance by thumbpiece. Key locks or unlocks thumbpiece.	HTT05CV HRT05CV
9100 F9100	06	Entrance by thumbpiece only when released by key. Key removable only when locked.	HTT06CV HRT06CV
9100 F9100	08	Entrance by knob or lever. Key locks or unlocks knob or lever.	YK08 Y*x* 08
9100 F9100	09	Entrance by knob or lever only when released by key. Key removable only when locked.	YK09 Y*x* 09
9100 F9100	11	Entrance by thumbturn and pull. Key locks or unlocks thumbturn.	YO11 YP11
9100 F9100	12	Entrance by thumbturn and pull only when released by key. Key removable only when locked.	YO12 YP12
9100	22	Entrance by thumbpiece (no cylinder). Trim always active.	HTT22CV HRT22CV
9100 F9100	23	Entrance by knob or lever (no cylinder). Knob or lever always active.	YK23 Y*x* 23

Trim Model			
YK02R	Y*x* 02R		
YK03R	Y*x* 03R	9K03	9*x* 03 9*x* 03J
		9K03J	
YK03R	Y*x* 03R	9K03 9K03J	9*x* 03 9*x*03J
Y*x*08C	9K08 9K08J	9*x* 08 9*x* 08J	
	Y*x*09C		
9K23	9*x* 23		

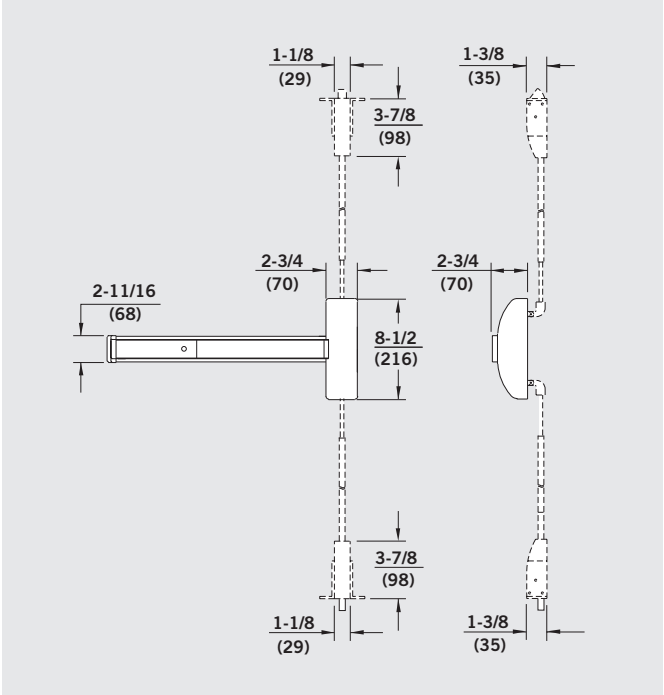

NOTE: When a trim designation includes an *x* (such as Y*x*23), replace *x* with the letter or number assigned to the chosen lever style. For example, YR23 specifies lever style R. See page 34 for details.

Standard Strikes

No. 418
Top Strike 9100/F9100, 9100 LB/F9100 LB

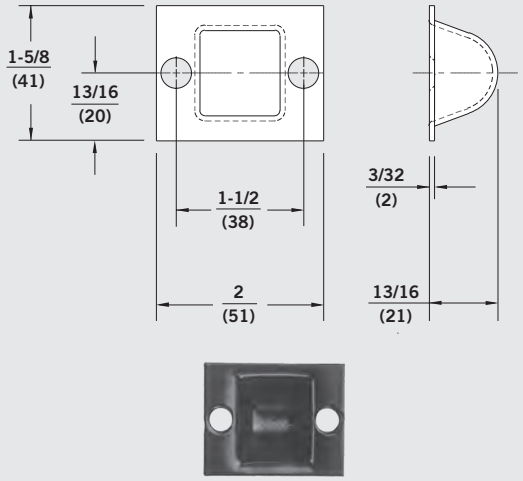

No. 439
Bottom Strike 9100/F9100

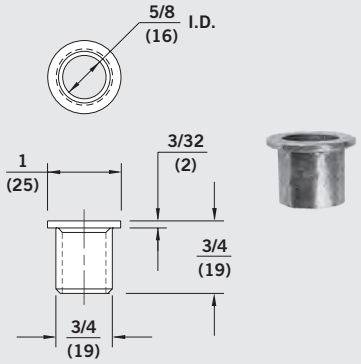

Optional Strikes

No. 419
Top Strike for use with wood frames

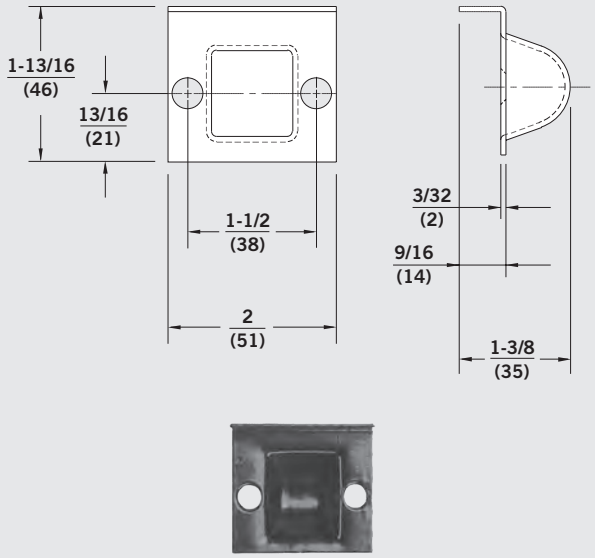

No. 431
Recessed Bottom Strike for use with optional pullman bottom latch bolt

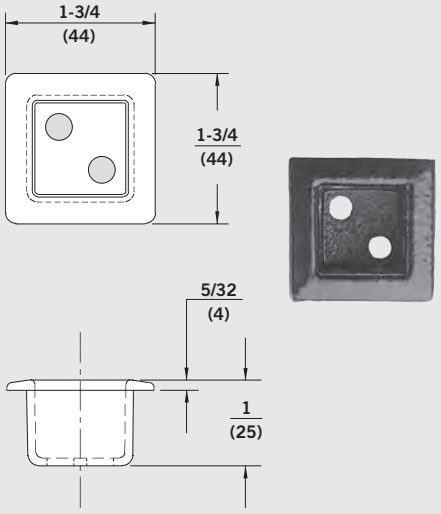

Optional Strikes

No. 340
Flat Bottom Strike;
optional for use with standard bottom slidebolt

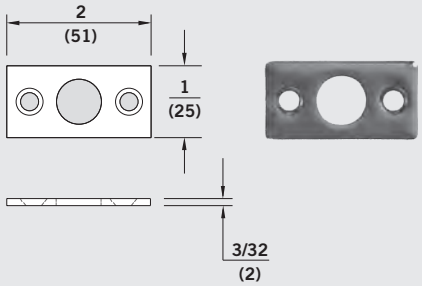

Minimum Stile & Vertical Reference

Pair Concealed Vertical Rod

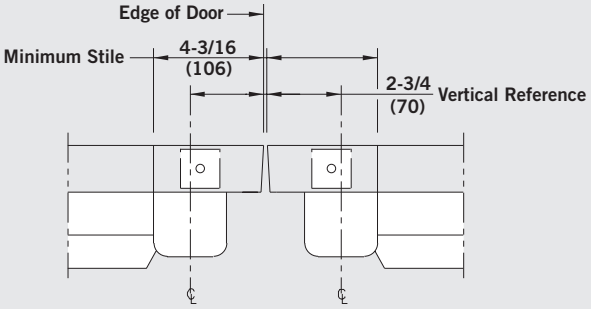

Concealed Vertical Rod × Mortise

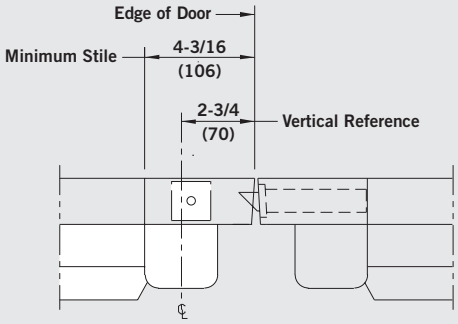

9300/F9300 WIDE STILE RIM EXIT DEVICES

The 9300 and F9300 present a simple, heavy-duty, easily installed solution where high quality panic and fire-listed hardware is needed. The patented exit devices in the 9300 and F9300 Series are available in a full range of finishes and trim options. The F9300 Series devices carry an "A" label for three-hour steel fire door applications.

Model	Function	Operation	Trim Model
9300 F9300	01	Exit Only (no trim)	
9300 F9300	DT	Dummy Trim	VODT, NPTDT, YODT
9300	02	Entrance by trim when actuating bar is locked down.	V102 V302, PTT02 PRT02, YP02
9300 F9300	03	Entrance by trim when latch bolt is retracted by key. Key removable only when locked.	VO03, V103 V303, NPT03, PTT03 PRT03, YO03, YP03
CD9300	04	Entrance by trim when latch bolt is retracted by key or set in a retracted position by key.	VO03, V103 V303, NPT03, PTT03 PRT03, YO03
9300 F9300	05	Entrance by thumbpiece. Key locks or unlocks thumbpiece.	HTT05 HRT05
9300 F9300	06	Entrance by thumbpiece only when released by key. Key removable only when locked.	HTT06 HRT06
9300 F9300	08	Entrance by knob or lever. Key locks or unlocks knob or lever.	YK08, Y*x*08
F9300	08×08	Entrance by lever. Outside or inside key locks or unlocks lever.	YK08×08, Y*x*08×08
9300 F9300	09	Entrance by knob or lever only when released by key. Key removable only when locked.	YK09, Y*x*09
9300 F9300	11	Entrance by thumbturn and pull. Key locks or unlocks thumbturn.	YO11, YP11
9300 F9300	12	Entrance by thumbturn and pull only when released by key. Key removable only when locked.	YO12, YP12
9300	22	Entrance by thumbpiece (no cylinder). Trim always active.	HTT22 HRT22
9300 F9300	23	Entrance by knob or lever (no cylinder). Knob or lever always active.	YK23, Y*x*23

Trim Model
YK02R Y*x*02R
YK03R Y*x*03R 9K03 9K03J POF03HDA 9*x*03 9*x*03J
YK03R Y*x*03R 9K03 9K03J POF03HDA 9*x*03 9*x*03J
Y*x*08C 9K08 9K08J 9*x*08 9*x*08J
Y*x*09C
9K23 9*x*23

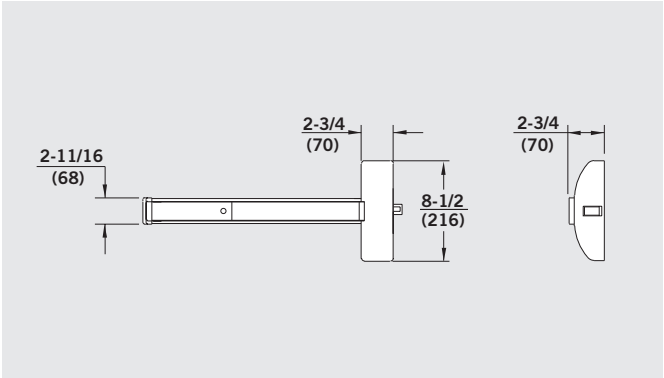

NOTE: When a trim designation includes an *x* (such as Y*x*23), replace *x* with the letter or number assigned to the chosen lever style. For example, YR23 specifies lever style R. See page 34 for details.

Standard Strike

No. 463
Standard Strike with 9300 and F9300

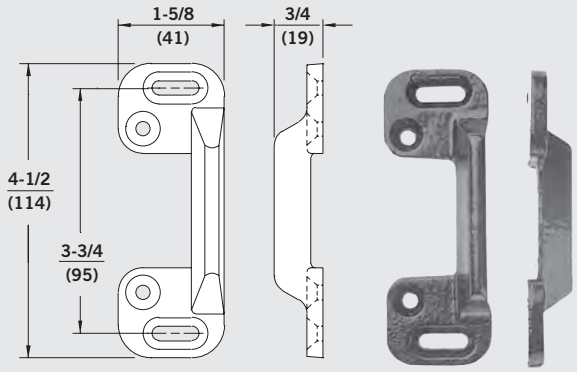

Optional Strike

No. 430
Box Strike with 9300

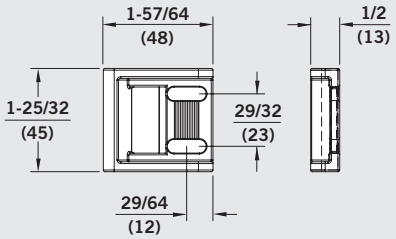

Optional Strikes

No. 486
Roller Strike for use with 9300

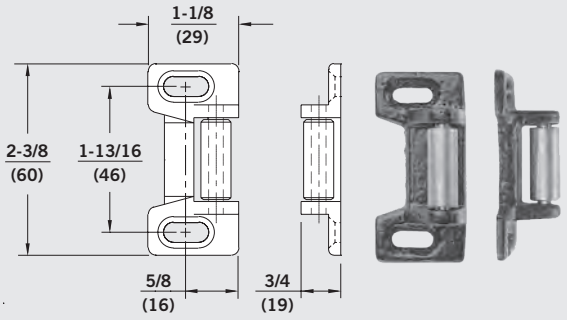

No. 320
Overlap Strike for use with 9300, **not fire rated**

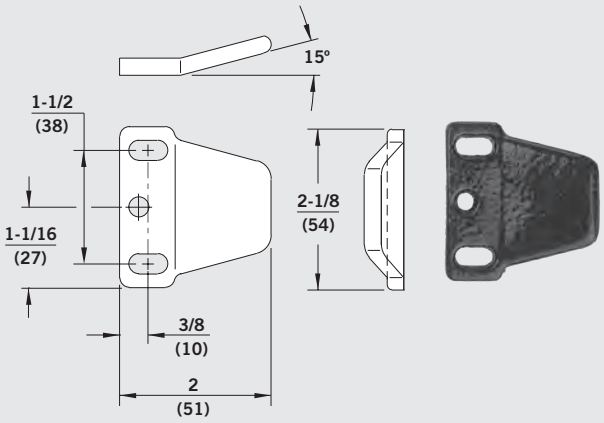

Minimum Stile & Vertical Reference

Single Door

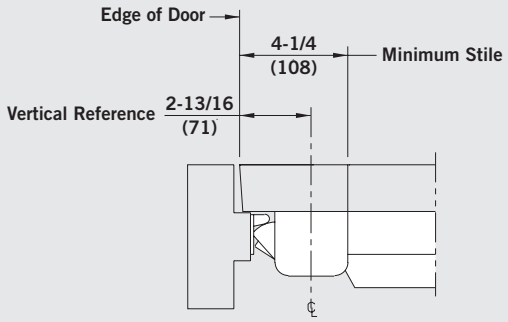

Pair Doors with Mullion

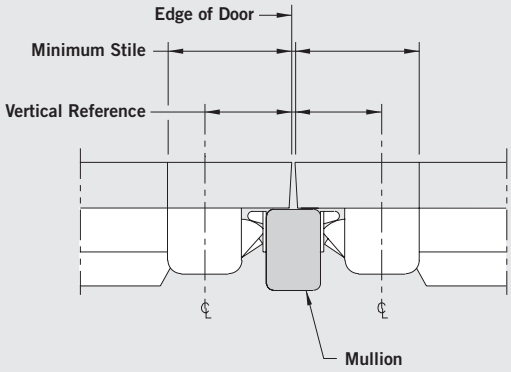

Mullion	Strike	Vert. Ref.	Min. Stile
1310	All	2-3/4" (70)	4-3/16" (106)
1330	All	3" (76)	4-7/16" (113)
(F)1300 (F)1340(KR)	All	3-1/4" (83)	4-11/16" (119)

Rim and Vertical Rod
Pair Doors with No Mullion

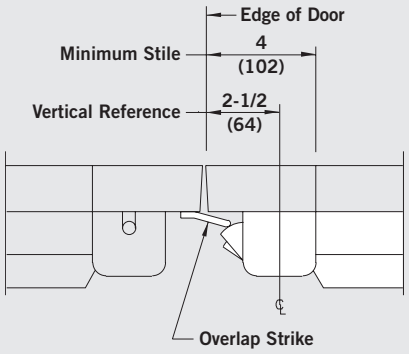

9400/F9400 WIDE STILE SURFACE VERTICAL ROD EXIT DEVICES

The 9400 and F9400 provide heavy-duty, secure, two-point latching at the top and bottom of the opening. Both the 9400 and F9400 Series feature a patented latch design for reliable, secure operation. The F9400 devices are U.L.-listed for three-hour steel fire door applications.

Model	Function	Operation	Trim Model
9400 F9400	01	Exit Only (no trim)	
9400 F9400	DT	Dummy Trim	VODT, NPTDT, YODT
9400	02	Entrance by trim when actuating bar is locked down.	V102 V302, PTT02 PRT02, YP02
9400 F9400	03	Entrance by trim when latch bolt is retracted by key. Key removable only when locked.	VO03, V103 V303, NPT03, PTT03 PRT03, YO03, YP03
CD9400	04	Entrance by trim when latch bolt is retracted by key or set in a retracted position by key.	VO03, V103 V303, NPT03, PTT03 PRT03, YO03
9400 F9400	05	Entrance by thumbpiece. Key locks or unlocks thumbpiece.	HTT05 HRT05
9400 F9400	06	Entrance by thumbpiece only when released by key. Key removable only when locked.	HTT06 HRT06
9400 F9400	08	Entrance by knob or lever. Key locks or unlocks knob or lever.	YK08
9400 F9400	09	Entrance by knob or lever only when released by key. Key removable only when locked.	YK09
9400 F9100	11	Entrance by thumbturn and pull. Key locks or unlocks thumbturn.	Y011, YP11
9400 F9100	12	Entrance by thumbturn and pull only when released by key. Key removable only when locked.	Y012, YP12
9400	22	Entrance by thumbpiece (no cylinder). Trim always active.	HTT22 HRT22
9400 F9400	23	Entrance by knob or lever (no cylinder). Knob or lever always active.	YK23

Trim Model						
YK02R		Y*x*02R				
YK03R		Y*x*03R		9K03 9K03J		9*x*03 9*x*03J
YK03R		Y*x*03R		9K03 9K03J		9*x*03 9*x*03J
Y*x*08		Y*x*08C		9K08 9K08J		9*x*08 9*x*08J
Y*x*09		Y*x*09C				
Y*x*23		9K23		9*x*23		

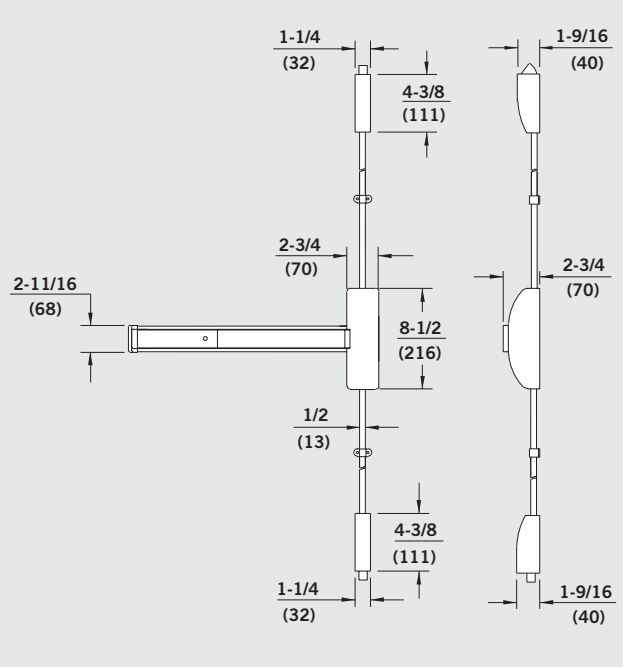

NOTE: When a trim designation includes an *x* (such as Y*x*23), replace *x* with the letter or number assigned to the chosen lever style. For example, YR23 specifies lever style R. See page 34 for details.

Standard Strikes

No. 426
Top Strike 9400/F9400, 9400 LB/F9400 LB

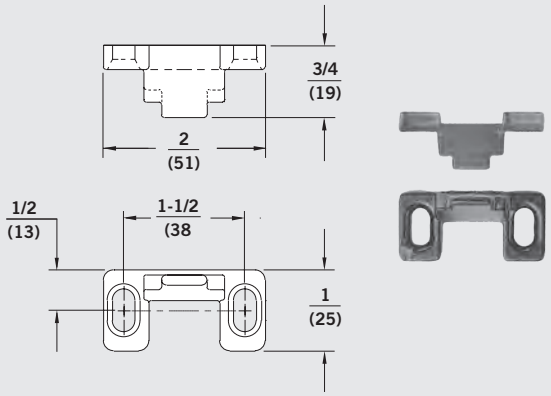

No. 439
Bottom Strike 9400/F9400

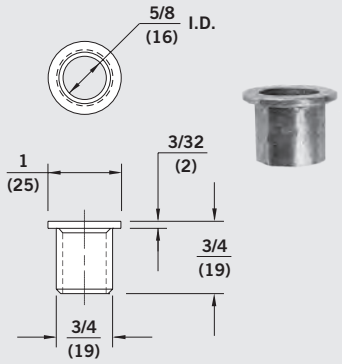

Optional Strikes

No. 426A
Top strike with angle bracket for use with flush door and frame

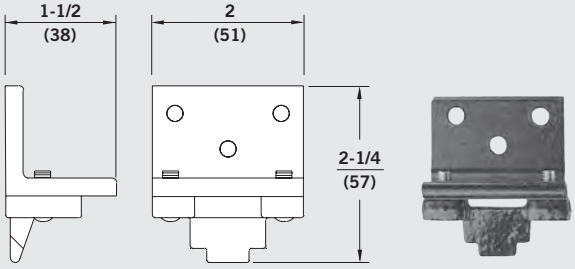

No. 340
Flat bottom strike for use with standard bottom slidebolt

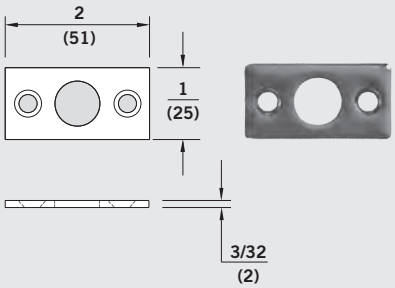

Optional Strikes

No. 416V
Surface mount bottom strike for use with optional pullman bottom latch

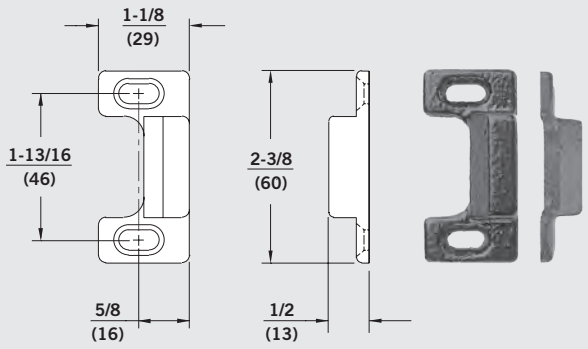

No. 431
Recessed bottom strike for use with optional pullman bottom latch bolt

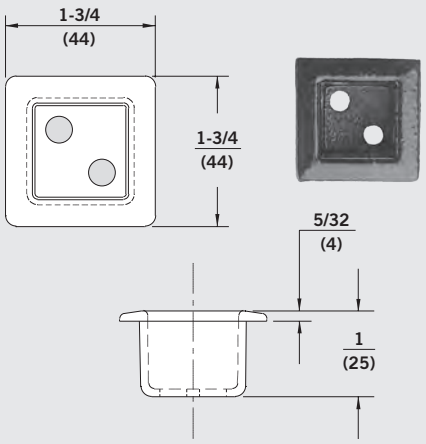

Minimum Stile & Vertical Reference

Vertical Rod × Mortise

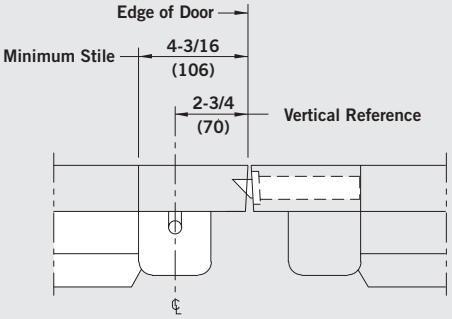

Pair Vertical Rod

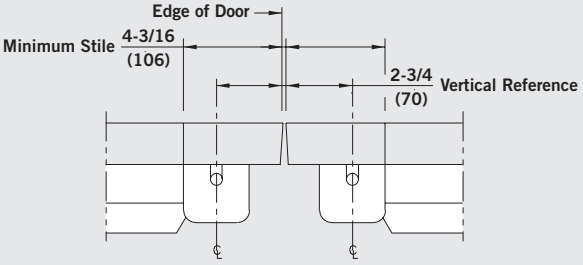

9500/F9500 WIDE STILE MORTISE LOCK EXIT DEVICES

The 9500 and F9500 include a heavy-duty, high quality deadlocking mortise lock that provides a high level of security and exceptional durability. The F9500 Series devices are U.L.-listed for three-hour steel fire door applications.

New mortise lock chassis with several new benefits including easier and faster to field reverse.

Model	Function	Operation	Trim Model
9500 F9500	01[1]	Exit Only (no trim)	
9500 F9500	DT[1]	Dummy Trim	VODT NPTDT YODT
9500	02[1]	Entrance by trim when actuating bar is locked down.	V102M V302M PTT02M PRT02M
9500 F9500	03[2]	Entrance by trim when latch bolt is retracted by key. Key removable only when locked.	VO03M V103M V303M NPT03M PTT03M PRT03M YO03M
CD9500	04[2]	Entrance by trim when latch bolt is retracted by key or set in a retracted position by key.	VO03M V103M V303M NPT03M PTT03M PRT03M YO03M
9500 F9500	05[3]	Entrance by thumbpiece. Key locks or unlocks thumbpiece.	HTT05M HRT05M
9500 F9500	08[1]	Entrance by knob or lever. Key locks or unlocks knob or lever.	YK08M
9500	22[3]	Entrance by thumbpiece (no cylinder). Trim always active.	HTT22M HRT22M
9500 F9500	23[1]	Entrance by knob or lever (no cylinder). Knob or lever always active.	

[1] Uses 08 function lock case
[2] Uses 03 function lock case—Uses 08 Lock case with #13 cam to achieve 03 function.
[3] Uses 05 function lock case

NOTES

- When a trim designation includes an x (such as Y*x*23), replace x with the letter or number assigned to the chosen lever style. For example, YR23 specifies lever style R. See pages 34-35 for details.
- When ordering a 9500 device without trim, specify the handing and device function so the correct mortise lock can be supplied.

Trim Model		
YP02	YK02R	Y*x*02R
YP03	YK08M	Y*x*03MR
	YK08M	Y*x*03MR
	Y*x*08M	Y*x*08MC
	YK23M	Y*x*23M

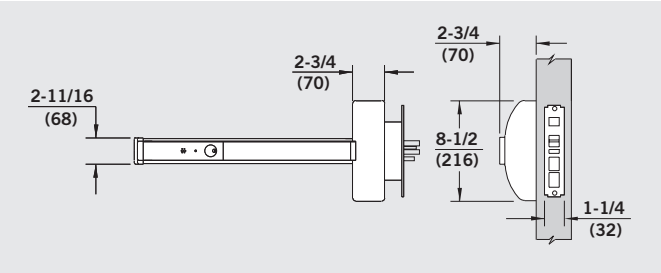

Standard Strike

No. 465
Standard strike with 9500/
F9500

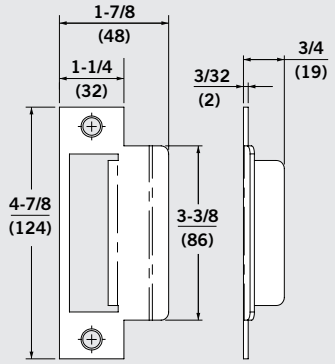

Optional Strike

No. 565
Open back strike. Hand of strike is the same as the device.
Specify hand (RHR shown).

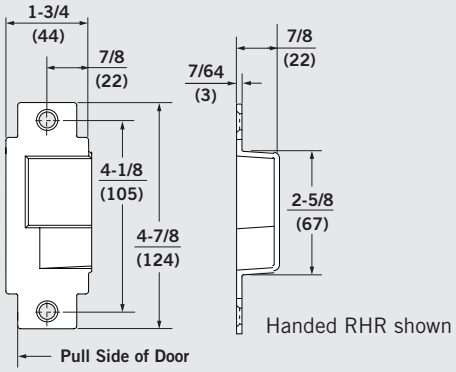

Mortise Lock

Available Functions – 03, 05, 08

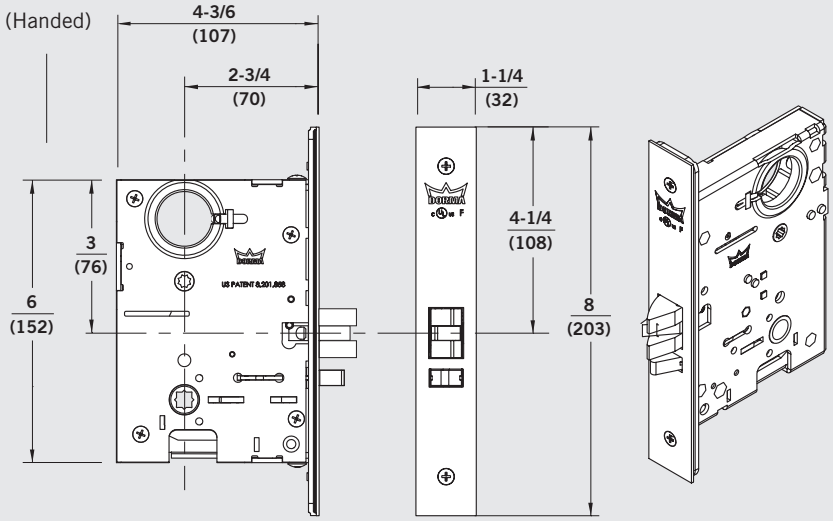

Vertical Reference

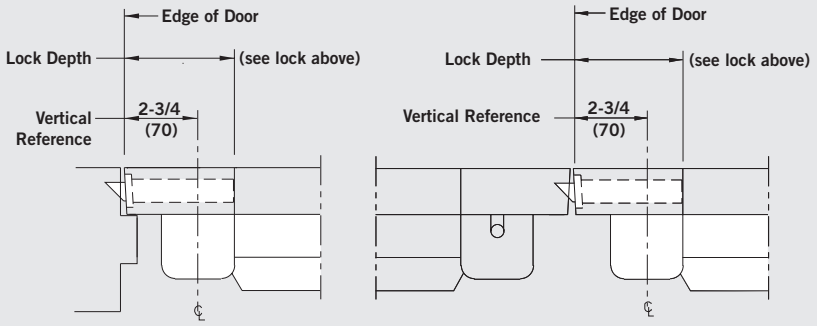

Single Doors

Mortise & Vertical Rod Pair Doors

ACCESSORIES

Non-functioning Exit Devices
The non-functioning exit device looks exactly like the 9000 Series, but has no latching mechanism. Units can be furnished in standard **A, B, or C** width or cut to special size when door width is specified. Order any applicable trim for push/pull function. Choose the type of operation required.

Rigid Touchbar Device
Touchpad is permanently fixed and immobile.
9035 – Wide Stile.

Moveable Touchbar Device
Same as rigid touchbar device, but touchbar is moveable. Similar to standard 9000 Series device.
9036 – Wide Stile.

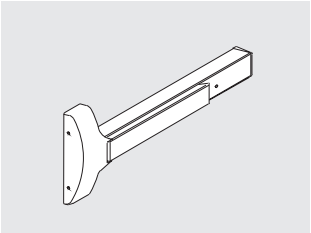

Moveable Touchbar Device with Microswitch
Same as moveable touchbar device, but includes microswitch that can be used to control electromagnetic locks, electric strikes, or other electronic appliances.
9036MS – Wide Stile.

9100/F9100	3 packs
9100/F9100 w/trim	1 pack
9300	3 packs
F9300	4 packs
9300/F9300 w/trim	1 pack
9400/F9400	6 packs
9400/F9400 w/trim	4 packs
9500/F9500	3 packs
9500/F9500 w/trim	1 pack

Sex Nuts
The chart above serves as a simple reference when specifying DORMA 9000 Series exit devices and trim.

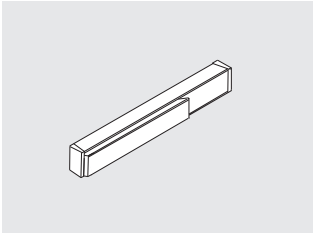

Dummy Bar
The dummy bar is designed as a companion to 9000 Series devices. Units consist of the touchbar assembly only and do not include the device chassis or chassis cover. Door width must be specified.

Rigid Dummy Bar
Touchbar only. Touchpad is permanently fixed and immobile.
9030 – Wide Stile.

Dummy Bar with Microswitch
Touchbar is moveable and activates included microswitch. Can be used to control electromagnetic locks, electric strikes, or other electronic appliances.
9030MS – Wide Stile.

Vision Lite Shim Kit
Contains two 1/8" thick shims. Permits shimming of the exit device maximum 1/4" off door face without affecting U.L. listing. Designed to accommodate glass lite installed in door. Furnished bright zinc plated. Optional finishes available, consult factory.
GK9000 – Wide Stile.

Conversion Kits
The following conversion kits are the same as options detailed elsewhere in this brochure, but in kit form with required components and installation instructions for field installation/retrofit.

MS Kit – Monitor Switch in Touchbar Kit
BPA Kit – Battery Powered Exit Alarm Kit
BPAR Kit – Battery Powered Exit Alarm, 4 Minute Reset Kit
DWA Kit – Direct Wired Alarm Kit
CD Kit – Cylinder Dogging Kit (less cylinder)

Security Screws
For applications where tamper-resistant security screws are required, specify **TX**.

NOTE: Special screw bits are required.

OPTIONAL ELECTRIC FUNCTIONS

Motorized Latch Bolt Retraction
Specify **MLR**. A motor concealed in the touchbar assembly provides retraction of the latch bolt by drawing in the touch bar to allow access from the secure side of the door. MLR can also be used to electrically dog/hold the exit push bar in a retracted position during non-secure hours (latch bolt is retracted). Remote control can be accomplished with switching devices such as key switches and card readers that provide a normally open electrical contact. The motor is rated at 24 VDC, .88 AMP. The motor draws approximately 400 milliamp during continuous operation. DORMA recommends use of either PS610RF or PS532RF to power one or two MLR devices respectively, but can also be powered with DORMA's ED900 Low Energy ADA Operator.

Electric Latch Bolt Retraction
Specify **ES**. A solenoid concealed in the touchbar assembly provides instantaneous retraction of the latch bolt to allow access from the secure side of the door. Remote control can be accomplished with switching devices such as key switches and card readers that provide a normally open electrical contact. The solenoid is rated for 24 VDC, 14–18 AMP continuous duty, 24 VDC, 14–18 AMP inrush for 200 milliseconds, 1 AMP holding current. **Requires PS501 power supply.**

Battery Back-up
Battery Back-up power supply options are available when using either the PS406BB or PS462BB power supplies. Specify **ESB** when ordering Electric Latch Bolt Retraction exit device.

Requires PS501 power supply & ES105 power transfer.
Not available with **C** or **CC** size devices, or 9500 mortise exit devices.

Monitor Switch
Specify **MS**. Two micro switches in the touchbar assembly functioning as form C contacts provide local and/or remote notification of two separate appliances when the touchbar is depressed. Each switch is rated for .5 AMP @ 28 VDC maximum.

Latch Monitor
Specify **LM**. A microswitch attached to the device chassis provides local and/or remote notification of the exit device rods without depressing the touchbar. The single-pole, double-throw switch is rated at .50 AMP @ 28 VDC maximum.

Latch Monitor with Monitor Switch
Specify **LM/MS**. A combination of Latch Monitor and Monitor Switch functions in one device.

Latch Monitor with Monitor Switch & Bypass
Specify **LM/MS BP**. Same as LM/MS above, but an additional single-pole, double-throw switch is triggered by a mortise cylinder for alarm bypass. Cylinder furnished.

Electric Dogging
Specify **MD**. A solenoid concealed in the touchbar provides instantaneous dogging of the touchbar assembly. **Requires PS545 power supply and ES105 power transfer.**

Motorized Dogging
Specify **MLR**. This feature can be used to electrically dog/hold the exit push bar in a retracted position during non-secure hours. (Latch bolt is retracted.)

PS Series Power Supplies
The **ES100 Power Supply** is capable of powering and controlling (1) DE9000 Series Exit Device.

- Input: 120 V
- Input Circuit Protection: 1.3 A fuse
- Output: 24 VDC, 6 A surge for 0.5 seconds, .65 A continuous, per zone
- Output Circuit Protection: 3 A push to reset circuit breaker
- Enclosure: 8" H × 8" W × 4" D NEMA 1 Type enclosure for indoor use with hinged cover and knock-outs

The **PS501 Power Supply** is capable of powering and controlling (2) 9000 Series Exit Devices with the ES Electric Latch Bolt Retraction feature. Also has the capability of powering (2) additional 9000 Series Exit Devices with an optional card. Specify option **ES2** CARD.

- Input: 120 volts
- Input circuit protection: 1 AMP circuit breaker
- Output: 24 VDC, 14–18 AMP surge, 2 AMP @ 5 volt continuous, per zone
- Output circuit protection: 4 AMP fuse
- Enclosure: 8" H × 8" W × 4" D NEMA 1 Type enclosure for indoor use with hinged cover and knock-outs

The **PS532RF** Power Supply is capable of powering and controlling (2) or **PS610RF** can power and control (1) 9000 Series Exit Device with the MLR Motorized Latch Bolt Retraction feature.

NOTE: The PS5352RF or PS610RF can be used with the ES105 power transfer cable, 75200 electric intermediate, or electric through wire hinges when rated to carry a minimum of 1 AMP continuous power. Power transfer device wires may require doubling or tripling depending on wire gage supplied.

- Input: 115VAC/60hz
- Output: PS532RF – 2.0A @ 24VDC, Class 2 PS610RF – 1.0A @ 24VDC, Class 2
- Enclosure: PS532 – 14"H × 16" W × 6.5" D PS610 – 12.5" H × 12.5" W × 4" D

The **ES105** is a power transfer with stainless steel housing and flexible tube. Secure and inconspicuous channel to bring power from the frame to the door. Narrow, shallow channel easily mortises into door edges. Accepts up to 5/16" diameter wire bundle. Accommodates doors that swing open 120°. Unit is concealed when the door is closed. Suitable for wood, aluminum, or steel applications.

Finish
Stainless: 630 (Satin)

DORMA DE9000 SERIES DELAYED EGRESS EXIT DEVICES

Certification

- Certified/listed to ANSI/BHMA 156.3, Grade 1 for exit devices.
- U.L. and C.U.L. listed under their continuing reinspection programs and conforms to standard U.L. 10C positive pressure testing.
- Complies with NFPA 101 life safety code. Fire rated devices comply with NFPA 80 fire doors and windows. Field selectable to comply with IBC 2012
- Devices, trim, pulls, and levers comply with the Americans for Disabilities Act, 1994, and ANSI 117.1-2003 for accessible and usable buildings and facilities.
- Contributes to U.S. Green Building Council, LEED MR Credits 2.1, 4.1, 4.2 and 5.1.
- Listed with the California Department of Forestry and Fire Protection, Office of the State Fire Marshal (wide stile devices only).
- Hurricane-code approved to Miami-Dade County Florida and Florida State Building Code acceptance (9300, 9400, 9500, 9700).

Specifications

All devices shall be DORMA DE9000 Series delayed exit devices with ES105 power transfer and ES100 power supply. Devices shall be rim, mortise, or concealed vertical rod. Devices to have a nuisance alarm with a steady tone to limit inadvertent activation. Depressing and holding the touchbar beyond the nuisance alarm period must initiate a 15 second delay with an intermittent tone. Following the irreversible 15 second delay alarm period, the device must release and continue an indefinite steady tone alarm until reset.

All devices must be capable of rearming by turning the key switch on the device to **rearm** or by using the alternate remote rearm capability. The same key switch must disarm the device for authorized egress.

All devices must provide two sets of relay contacts that activate when the device is in an irreversible alarm to control remote audible/visual alarms included in DORMA control consoles.

All devices must have an LED indicator light for conveying the status of the device.

Internal locking feature is required to further enhance security when subjected to forced opening.

Devices must provide an input for use with an external door position switch to prohibit doors from being held open while the device is armed.

The device must alarm simultaneously with the activation of the door position switch.

When power is cut to the devices, they must release and function as typical exit devices in the event of a fire or emergency situation.

All devices to have heavy-duty cast chassis.

All device touchbar, rail, and cover assemblies shall be constructed of heavy gauge solid wrought materials for true architectural finishes or color coated finishes where applicable.

Fire rated versions shall be available for labeled applications.

All concealed vertical rod devices shall have pullman type top latch bolts and round slidebolt bottom latches.

All devices to have deadlocking latch bolts with 3/4" throw where applicable.

All units shall offer a full range of free wheeling operational trim, except mortise devices.

All units shall offer optional rigid and clutch style trim, where applicable.

All devices to be furnished with appropriate mounting hardware including both wood and machine screws, as well as sex nuts where required. An adhesive sign with an operation directive must be supplied.

Optional Specifications

All devices to be furnished with a 30 second irreversible delay alarm. Written approval from the authority having jurisdiction required. Specify **30**.

All devices for CBC compliant applications to include special CBC door label. Specify **CBC**.

All concealed vertical rod devices to have pullman type bottom latch bolt. Specify **PB**.

All surface/concealed vertical rod devices to have extended top rod up to 10'. Specify **ETR** for 8', 9', or 10'.

All devices to use a glass lite shim kit to raise the device from the door surface to accommodate glass light molding. Specify **GK9000**.

All devices for labeled wood or composite doors to be furnished with sex bolts. Specify **SNB**.

All devices to be furnished with rigid trim. Specify **R** after trim number.

All devices to be furnished with clutch style lever trim. Specify **C** after lever trim number.

All concealed vertical rod devices installed in aluminum doors to be furnished with appropriate brackets for aluminum door applications. Specify **ALD** (DE9100 only).

All devices to use tamper-resistant security screws for attaching the end cap, chassis cover, and strikes. Specify **TX**.

Finishes

Architectural Finishes

- Brass: 605 (Bright) or 606 (Satin)
- Bronze: 611 (Bright), 612 (Satin), or 613 (Oxidized Satin)
- Nickel: 619 (Satin)
- Black: 693
- Chrome: 625 (Bright) or 626 (Satin)
- Stainless Steel: 630 (Satin)

Powder Coated Finishes

- Aluminum: 689
- Bronze: 691 (Dull) or 695 (Dark Duranodic)
- Black: 693
- Gold: 696
- Clear Powder Coating: Specify **P**
- Anti-Microbial: Specify **AM**

DORMA DE9000 DELAYED EGRESS FEATURES

Delayed Egress
The DE9000 is armed and the touchbar will not activate the latch bolt for 15 seconds (30 second factory option available). This provides a controlled delayed egress while simultaneously sounding a local and remote audible alarm. After the delay time, unrestricted emergency egress is available.

Nuisance Alarm
The nuisance alarm, with a steady warning tone, deters inadvertent activation of the device when the touchbar is depressed. Releasing the touchbar before the predefined nuisance alarm time of 1 or 3 seconds terminates the alarm, and the device returns to the armed mode. Depressing the touchbar longer than the predefined time will initiate the 15 second irreversible delay cycle. The 1 or 3 second nuisance alarm time is included in the 15 second irreversible delay time. The nuisance alarm time is field-selectable for three seconds or one second by a dip switch. **A 30 second delay option is available set at the factory. Written approval is required from the authority having jurisdiction.**

Local or Remote Alarm
Device has an internal 85 dB alarm which will sound indefinitely in the alarm state until the device is reset. Additionally, a form **C** relay is provided for activating remote audible/visual signaling of DORMA control console or third party console, security panel, or other audible/visual signaling device.

Indicator LED
Status for the DE9000 can be determined by the indicator LED which is visible in varied lighting conditions. When the device is disarmed for an extended time in the **bypass** mode, the LED will maintain a slow green flash. When activated for **authorized egress**, the LED displays a rapid green flash until the device automatically rearms. In the armed state, the LED maintains a solid green. When the touchbar is depressed for exit, the nuisance alarm will sound while the LED remains solid green. In the 15 second irreversible delay cycle, the LED turns solid yellow. In the alarm state, the LED is solid red.

Key Switch Control
This integral key switch provides the means to locally rearm the device from the alarm state, disarm for authorized egress, and set the device for the **bypass** feature. A mortise cylinder is supplied with the device.

Remote Authorized Egress
This function allows override of the device in the armed state. The device will unlock for egress and automatically rearm to the delayed egress mode in 10 seconds. The field-selectable reset time allows up to a 20 second reset. Typical activation devices include remote consoles, key switches, or card readers. This input is controlled with a momentary action normally open switch.

Remote Rearm
Remote rearming of the device is allowed from the alarm state. Typical activation devices include remote consoles or key switches. This input is controlled with a momentary action normally open switch. Consult local authority having jurisdiction when using this feature.

Door Position Input
An input for use with an external door position switch is provided. This input switch is a maintained action normally closed contact. The device alarms simultaneously with the contact opening. The door is prohibited from being forced or held open unauthorized while the device is armed. The field-selectable authorized egress and bypass functions ignore the door position input for authorized exit or entrance.

Electrical Specifications
Input Power
24 VDC @ .5 A continuous
(5 A inrush for 350 ms).

Power must be provided by a DORMA ES100 power supply.

Door Position Input
Requires a normally closed contact.

Pigtail provided for the following:
Input power, remote authorization egress, remote bypass/rearm, relay contacts for audible/visual console, door position switch input, fire alarm contacts, and pairs of doors.

DE9000 Exit Device

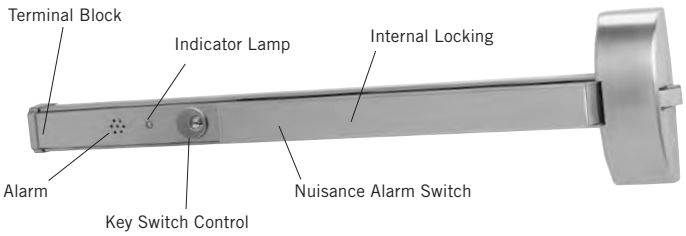

AUXILIARY EQUIPMENT

Alarms

The 9000 Series exit devices are available with an integral battery powered alarm. The 102 decibel alarm contained in the panic device touchbar and rail assembly activates when the touchbar is depressed and sounds continuously until the device is reset or the battery is completely discharged. Alternatively, a factory-furnished option allows the alarm to sound for four (4) minutes, then automatically rearm.

Furnished with and controlled by a lock cylinder and key, the unit allows ten (10) seconds to exit through the door after arming the alarm, indicated by an intermittently flashing red LED light in the touchbar. A yellow LED in the touchbar will flash until manually reset by key to indicate an unauthorized exit even if the alarm has automatically reset.

The unit is furnished with a 9 volt, industrial-grade battery concealed in the end cap assembly for easy replacement. A tamper-proof switch will activate the alarm if unauthorized removal of the battery is attempted. Option is available for 12 or 24 volt direct power wiring.

- Specify **BPA** for battery alarm device.
- Specify **BPAR** for 4 minute auto reset battery alarm device.
- Specify **DWA** for direct hard-wired option.

- Size **A** device fits 48" wide door and can be cut to fit 39" wide doors.
- Size **B** device fits 36" wide door and can be cut to fit 33" wide doors.
- Size **C** device fits 30" wide door.

TRIM OPTIONS

Clutch Lever Trim
Free wheeling, vandal-resistant lever standard, except on 9500 mortise devices. Although mandated to meet ADA requirements, lever handles are especially subject to vandalism and damage. The **clutch** option for lever trim includes an internal slip clutch mechanism which allows the lever handle to break away without damage or violating security when excessive force is applied. The lever can be lifted back to horizontal to reset it.

An internal dead stop limits the break away to 55° of lever handle rotation. Specify **C** to trim designation. Specify hand.

Rigid Trim – Rigid lever and knob option. Specify **R** to trim designation.

Retrofit – For Von Duprin 98/99 Series Rim Devices. Specify **R1** (narrow and wide plate trim only).

Electrified Trim – Electrified **Y** style trim with integral locking/unlocking option. Trim can be used with models 9100/F9100, 9300/F9300 and 9400/F9400. Available as fail-secure or fail-safe. Specify **LFSC** (fail-secure) or **LFSF** (fail-safe) following trim designation. Available for the 09 function only. **Electrified trim options must use an ES100 power supply to prevent permanent damage to the electronics. Two devices can be powered by an ES100 device.**

Electrified option also available with the 9500/F9500 mortise device which utilizes an electrified mortise lock design to unlock hub of chassis. Specify following exit device designation, i.e. 9500LFSF (FAIL-SAFE) or 9500LFSC (FAIL-SECURE). Available for all styles of trim with an 08 function. This option is not field-interchangeable between fail-secure and fail-safe. **Electrified mortise locks must use a PS610RF power supply to prevent permanent damage to the electronics. Two devices can be powered by a PS610RF device.**

LEVER & KNOB STYLES FOR Y WIDE STILE TRIM

A

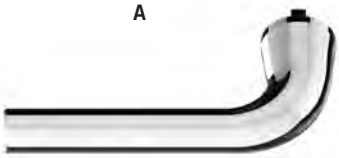

C

D

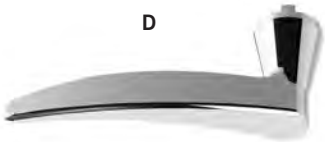

F

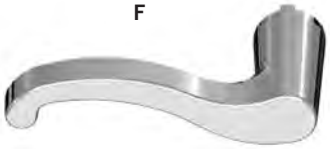

G

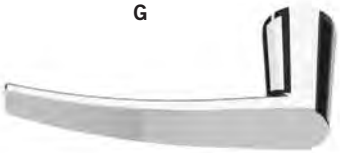

K

R

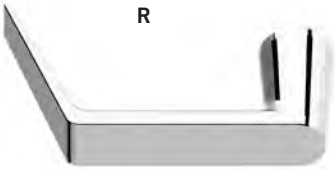

T

N

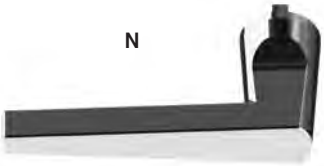

V

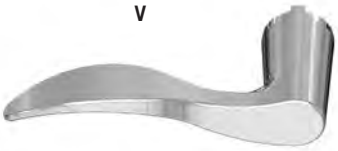

L109

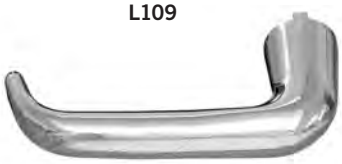

L114

L110

L112

L113

L117

L118

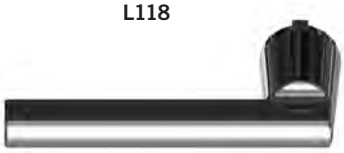

Finishes

Architectural Finishes

- Brass: 605 (Bright) or 606 (Satin)
- Bronze: 611 (Bright), 612 (Satin), or 613 (Oxidized Satin Oil Rubbed)
- Nickel: 619 (Satin)
- Chrome: 625 (Bright) or 626 (Satin)
- Stainless Steel: 630 (Satin)

Powder Coated Finishes

- Aluminum: 689
- Bronze: 691 (Dull) or 695 (Dark Duranodic)
- Black: 693
- Gold: 696

Clear Powder Coating

Specify P

Antimicrobial Protected Coating

Specify AM

9000 SERIES WIDE STILE Y ESCUTCHEON TRIM

- Heavy-duty, vandal-resistant escutcheon.
- Corrosion-resistant, stainless steel offered standard.
- Hundreds of lever and pull styles and finish combinations to satisfy the most demanding interior design requirement.
- Choose from 14 ANSI/BHMA standard architectural finishes, or dozens of DORMA Custom RAL colors, or, for those unique interior designs, DORMA's Designer Color special color matching system.
- Antimicrobial protected coating when ultra clean environments are specified.
- Clear powder coating for outdoor or highly corrosive environments that need added protection. Also minimizes the appearance of fingerprints.
- Conventional rim or mortise cylinders included standard.
- Configurable with SFIC to accommodate DORMA's patented SKC key control system.
- All standard devices and trim are designed for 1-3/4"–2-1/4" thick doors. For door thickness greater than 2-1/4", select door thickness option.
- Under U.S. law, qualifies for *Made in U.S.A. of U.S. and imported parts*.
- Steeleville, IL manufacturing facility certified to ISO 9000 and ISO 14001.

Y Series Trim (Specify) | **Door Thickness** | **Special Finish Coating** | **Retrofit** | **Cylinders & Keying**

Escutcheon	Knob, Pull, or Lever	Function	Handing	Electric Locking*	Finish				Cylinder Type	Keyway	Keying
					630				D	SC	KD
Y	A	DT	RHR	LFSC	605	Ext3	AM	R1	C	CA	KD
	C	02	LHR	LFSF	606	Ext4	P		D	CD	KA2
	D	02R			611				J	CE	KA4
	K	03			612				L	*D100	NSK
	F	03R			613				T	GA	MKD
	G	03MR			619				R	RA	CMK
	R	08			625				X6	RB	SKD
	T	08M			626				X7	SC	0Bit
	O	08C — Handed			630					SE	
	P	08MC — Handed			689					SF	
	N	0808 — Double Cylinder			691					WA	
	V	09			693					YA	
	L109	09C — Handed			695					YG	
	L110	11			696						
	L112	12			Custom						
	L113	23			Designer						
	L114										
	L117										
	L118										

Suffix **M** required for 9500 mortise
Suffix **C** and **LHR/RHR** required for clutch
Suffix **R** required for rigid lever

— Default

***Patented Key Control**

D100 is the keyway for DORMA's patented **SKC** serialized key control system. **SKC** is internet based and provides added layers of security. For more information, contact your local DORMA sales representative or DORMA Technical Service at 800-523-8483.

*** LFSC/ LFSF on 09/ 09C Only**

9000 SERIES SECTIONAL TRIM

- Hundreds of lever and knob styles and finish combinations to satisfy the most demanding interior design requirement.
- Choose from 14 ANSI/BHMA standard architectural finishes, or dozens of DORMA Custom RAL colors, or, for those unique interior designs, DORMA's Designer Color special color matching system.
- Antimicrobial protected coating when ultra clean environments are specified.
- Clear powder coating for outdoor or highly corrosive environments that need added protection. Also minimizes the appearance of fingerprints. Conventional key-in-lever/knob cylinder included standard.
- Configurable with SFIC to accommodate DORMA's patented SKC key control system
- All standard devices and trim are designed for 1-3/4"–2-1/4" thick doors. For door thickness greater than 2-1/4", consult DORMA Technical Service. Under U.S. law, qualifies for *Made in U.S.A. of U.S. and imported parts*.
- Steeleville, IL manufacturing facility certified to ISO 9000 and ISO 14001.

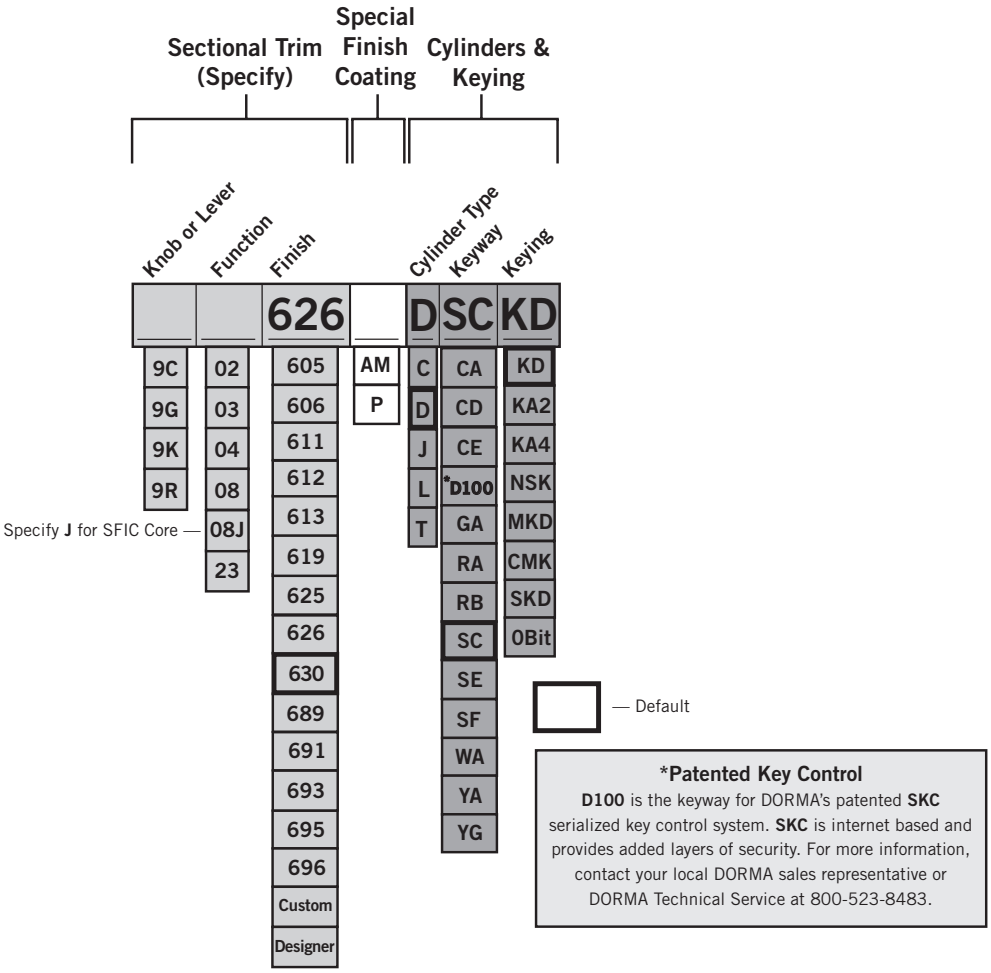

***Patented Key Control**

D100 is the keyway for DORMA's patented **SKC** serialized key control system. **SKC** is internet based and provides added layers of security. For more information, contact your local DORMA sales representative or DORMA Technical Service at 800-523-8483.

9000 SERIES 3" WIDE PLATE TRIM

- Heavy-duty, 3" × 16" stainless steel plate and pull offered standard.
- Choose from 14 ANSI/BHMA standard architectural finishes, or dozens of DORMA Custom RAL colors, or, for those unique interior designs, DORMA's Designer Color special color matching system.
- Antimicrobial protected coating when ultra clean environments are specified.
- Clear powder coating for outdoor or highly corrosive environments that need added protection. Also minimizes the appearance of fingerprints.
- Conventional rim or mortise cylinders included standard.
- Configurable with SFIC to accommodate DORMA's patented SKC key control system.
- All standard devices and trim are designed for 1-3/4"–2-1/4" thick doors. For door thickness greater than 2-1/4", consult DORMA Technical Service.
- Under U.S. law, qualifies for *Made in U.S.A. of U.S. and imported parts*.
- Steeleville, IL manufacturing facility certified to ISO 9000 and ISO 14001.

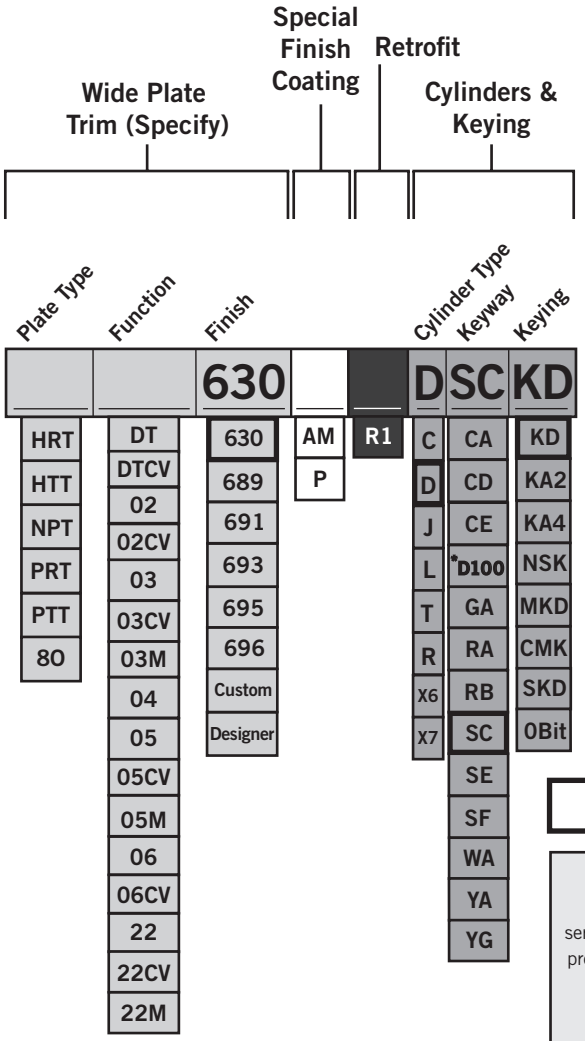

Suffix **CV** required for 9100 CVR
Suffix **M** required for 9500 mortise

— Default

***Patented Key Control**

D100 is the keyway for DORMA's patented **SKC** serialized key control system. **SKC** is internet based and provides added layers of security. For more information, contact your local DORMA sales representative or DORMA Technical Service at 800-523-8483.

9000 SERIES 2" WIDE STILE PLATE TRIM

- Heavy-duty, 2" × 16" stainless steel plate and pull offered standard.
- Choose from 14 ANSI/BHMA standard architectural finishes, or dozens of DORMA Custom RAL colors, or, for those unique interior designs, DORMA's Designer Color special color matching system.
- Antimicrobial protected coating when ultra clean environments are specified.
- Clear powder coating for outdoor or highly corrosive environments that need added protection. Also minimizes the appearance of fingerprints.
- Conventional rim or mortise cylinders included standard.
- Configurable with SFIC to accommodate DORMA's patented SKC key control system.
- All standard devices and trim are designed for 1-3/4"–2-1/4" thick doors. For door thickness greater than 2-1/4", consult DORMA Technical Service.
- Under U.S. law, qualifies for *Made in U.S.A. of U.S. and imported parts*.
- Steeleville, IL manufacturing facility certified to ISO 9000 and ISO 14001.

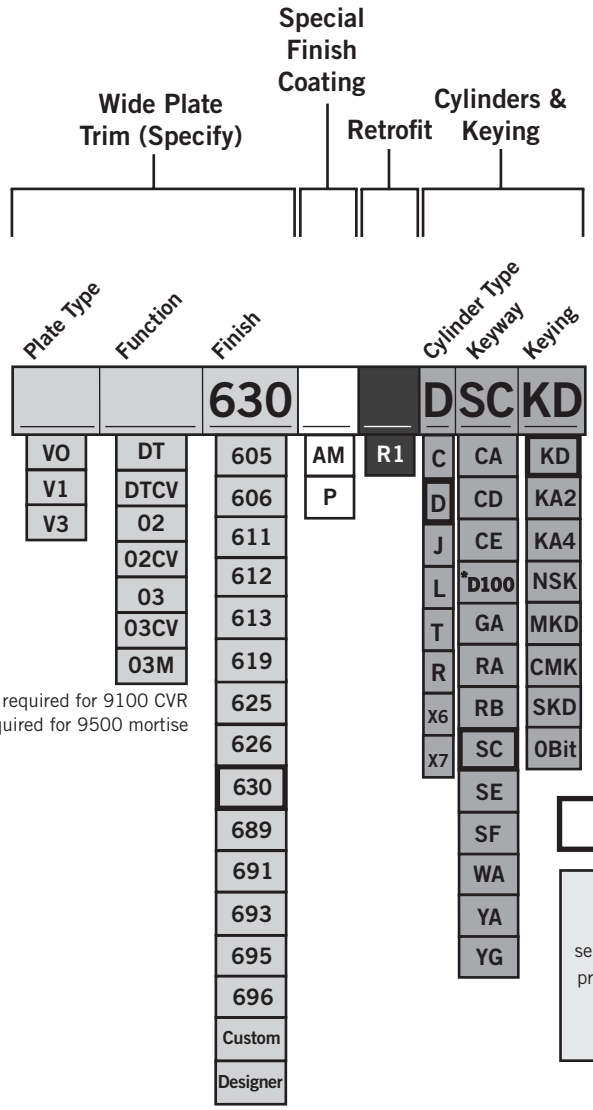

Suffix **CV** required for 9100 CVR
Suffix **M** required for 9500 mortise

— Default

***Patented Key Control**

D100 is the keyway for DORMA's patented **SKC** serialized key control system. **SKC** is internet based and provides added layers of security. For more information, contact your local DORMA sales representative or DORMA Technical Service at 800-523-8483.

9000 SERIES WIDE STILE PULL TRIM

- Heavy-duty stainless steel offered standard.
- Choose from 14 ANSI/BHMA standard architectural finishes, or dozens of DORMA Custom RAL colors, or, for those unique interior designs, DORMA's Designer Color special color matching system.
- Antimicrobial protected coating when ultra clean environments are specified.
- Clear powder coating for outdoor or highly corrosive environments that need added protection. Also minimizes the appearance of fingerprints.
- Conventional rim or mortise cylinder included standard.
- Configurable with SFIC to accommodate DORMA's patented SKC key control system.
- All standard devices and trim are designed for 1-3/4"–2-1/4" thick doors. For door thickness greater than 2-1/4", consult DORMA Technical Service.
- Under U.S. law, qualifies for *Made in U.S.A. of U.S. and imported parts*.
- Steeleville, IL manufacturing facility certified to ISO 9000 and ISO 14001.

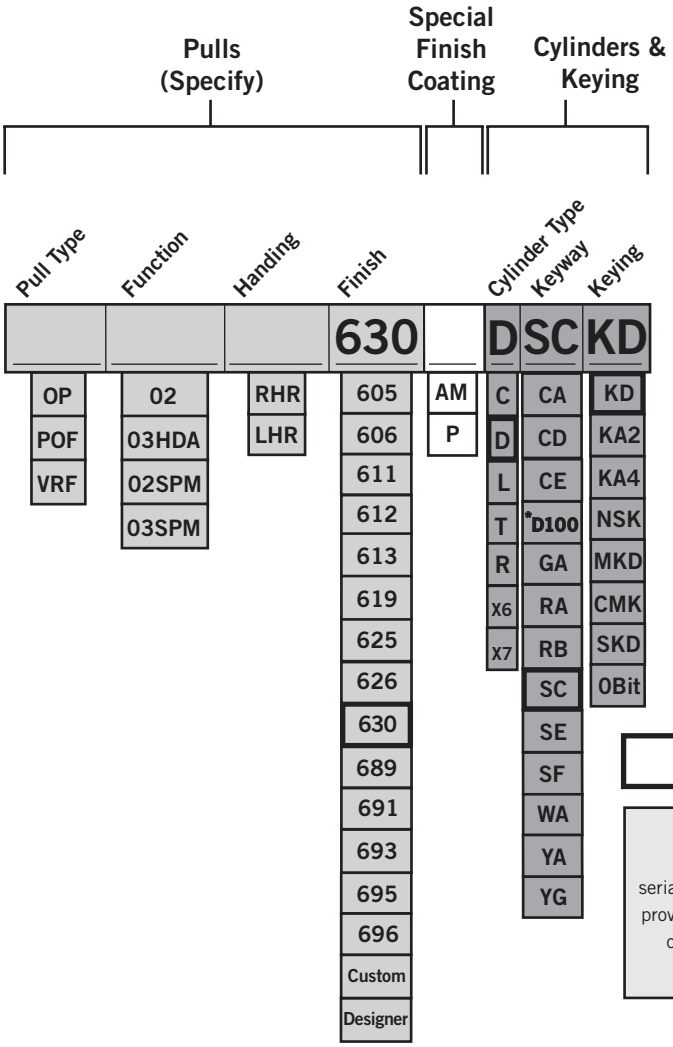

— Default

***Patented Key Control**

D100 is the keyway for DORMA's patented **SKC** serialized key control system. **SKC** is internet based and provides added layers of security. For more information, contact your local DORMA sales representative or DORMA Technical Service at 800-523-8483.

WIDE STILE PLATE/PULL TRIM

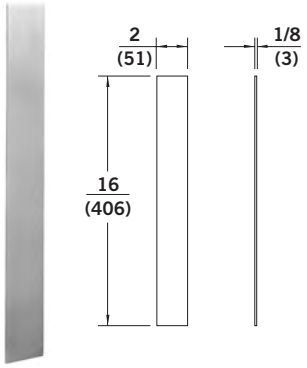

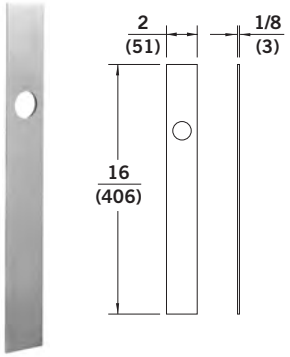

Trim Descriptions	Exit Only	2" Wide Flat Plate Dummy Trim	2" Wide Flat Plate with Cylinder Hole
Trim Designation	No Trim	VODT, VODTCV	VO03, VO03CV
Handing	—	—	—
Function	01	DT	03 or 04 (with CD device)
DORMA Cylinder (default)	—	—	80R20SC – Rim
DORMA Cylinder (optional SFIC)	—	—	87R20BA – 7-pin

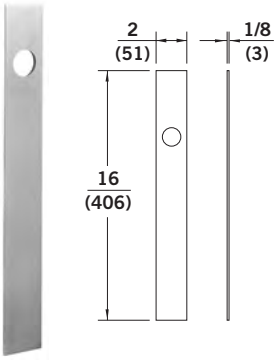

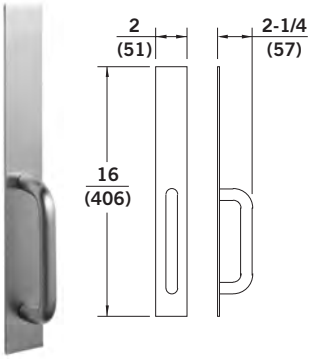

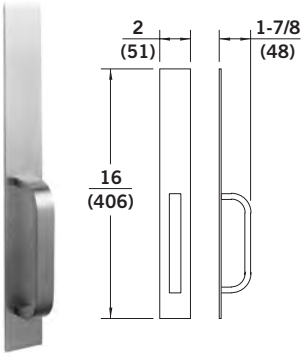

Trim Descriptions	2" Wide Flat Plate with Cylinder Hole (mortise)	2" Wide Flat Plate Tubular Pull	2" Wide Flat Plate Rectangular Pull
Trim Designation	VO03M	V102, V102CV	V302, V302CV
Handing	—	—	—
Function	03 or 04 (with CD device)	02	02
DORMA Cylinder (default)	90A10SC118 – Mortise * 90A13SC118 – Mortise **	—	—
DORMA Cylinder (optional SFIC)	97B10BA138 – 7-pin * 97B13BA138 – 7-pin **	—	—

NOTE:

* Devices shipped **before** November 2014

** Devices shipped **after** November 2014

See chart on page 49 for more information.

WIDE STILE PLATE/PULL TRIM

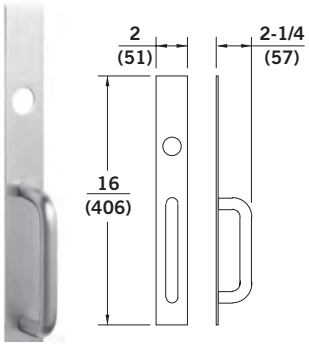

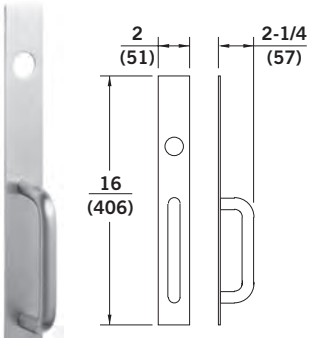

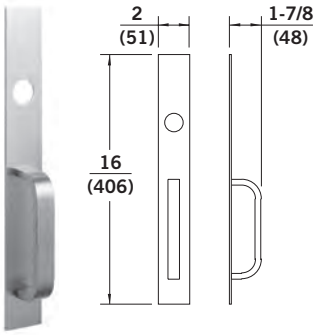

Trim Descriptions	2" Wide Flat Plate Tubular Pull with Cylinder Hole	2" Wide Flat Plate Tubular Pull with Cylinder Hole (mortise)	2" WideFlat Plate Rectangular Pull with Cylinder Hole
Trim Designation	V103, V103CV	V103M	V303, V303CV
Handing	—	—	—
Function	03 or 04 (with CD device)	03 or 04 (with CD device)	03 or 04 (with CD device)
DORMA Cylinder (default)	80R20SC – Rim	90A10SC118 – Mortise * 90A13SC118 – Mortise **	80R20SC – Rim
DORMA Cylinder (optional SFIC)	87R20BA – 7-pin	97B10BA138 – 7-pin * 97B13BA138 – 7-pin **	87R20BA – 7-pin

NOTE:

* Devices shipped **before** November 2014

** Devices shipped **after** November 2014

See chart on page 49 for more information.

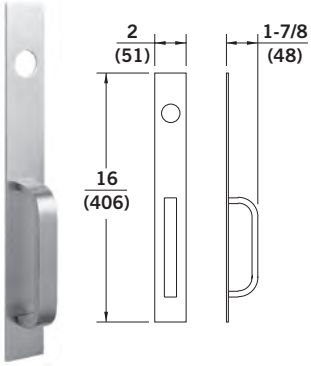

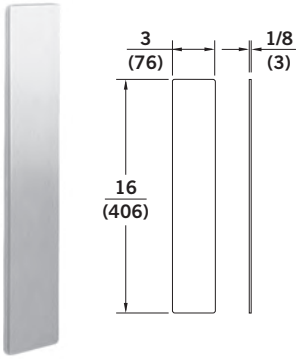

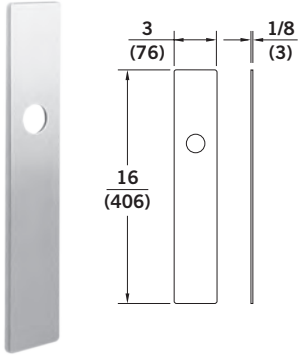

Trim Descriptions	2" Wide Flat Plate Rectangular Pull with Cylinder Hole (mortise)	3" Wide Flat Plate Dummy Trim	3" Wide Flat Plate with Cylinder Hole
Trim Designation	V303M	NPTDT, NPTDTCV	NPT03, NPT03CV
Handing	—	—	—
Function	03 or 04 (with CD device)	DT	03 or 04 (with CD device)
DORMA Cylinder (default)	90A10SC118 – Mortise * 90A13SC118 – Mortise **	—	80R20SC – Rim
DORMA Cylinder (optional SFIC)	97B10BA138 – 7-pin * 97B13BA138 – 7-pin **	—	87R20BA – 7-pin

NOTE:

* Devices shipped **before** November 2014

** Devices shipped **after** November 2014

See chart on page 49 for more information.

WIDE STILE PLATE/PULL TRIM

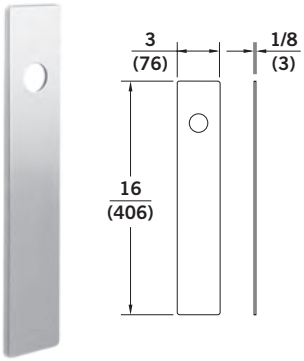

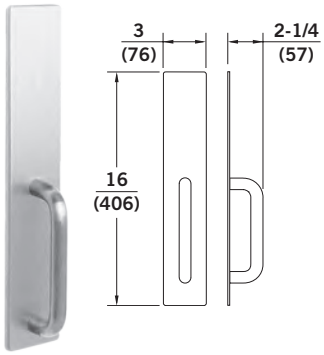

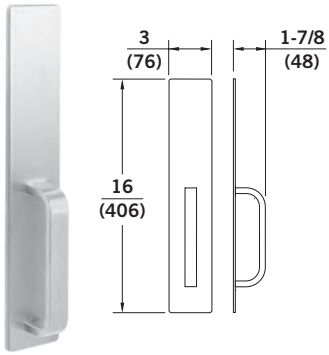

Trim Descriptions	3" Wide Flat Plate with Cylinder Hole (mortise)	3" Wide Flat Plate Tubular Pull	3" Wide Flat Plate Rectangular Pull
Trim Designation	NPT03M	PTT02, PTT02CV	PRT02, PRT02CV
Handing	—	—	—
Function	03 or 04 (with CD device)	02	02
DORMA Cylinder (default)	90A10SC118 – Mortise * 90A13SC118 – Mortise **	—	—
DORMA Cylinder (optional SFIC)	97B10BA138 – 7-pin * 97B13BA138 – 7-pin **	—	—

NOTE:

* Devices shipped **before** November 2014

** Devices shipped **after** November 2014

See chart on page 49 for more information.

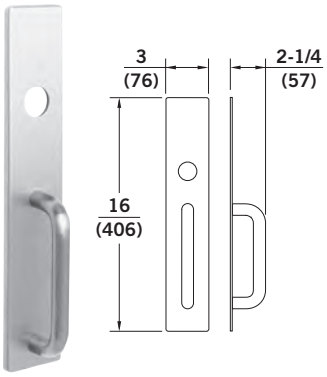

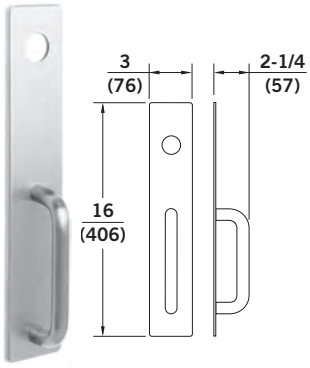

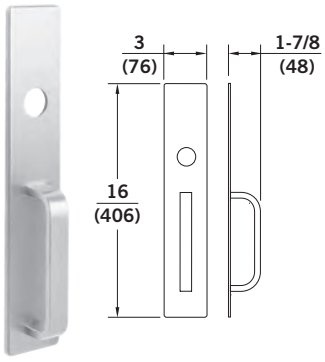

Trim Descriptions	3" Wide Flat Plate Tubular Pull with Cylinder Hole	3" Wide Flat Plate Tubular Pull with Cylinder Hole (mortise)	3" Wide Flat Plate Rectangular Pull with Cylinder Hole
Trim Designation	PTT03, PTT03CV	PTT03M	PRT03, PRT03CV
Handing	—	—	—
Function	03 or 04 (with CD device)	03 or 04 (with CD device)	03 or 04 (with CD device)
DORMA Cylinder (default)	80R20SC – Rim	90A10SC118 – Mortise * 90A13SC118 – Mortise **	80R20SC – Rim
DORMA Cylinder (optional SFIC)	87R20BA – 7-pin	97B10BA138 – 7-pin * 97B13BA138 – 7-pin **	87R20BA – 7-pin

NOTE:

* Devices shipped **before** November 2014

** Devices shipped **after** November 2014

See chart on page 49 for more information.

WIDE STILE PLATE/PULL TRIM

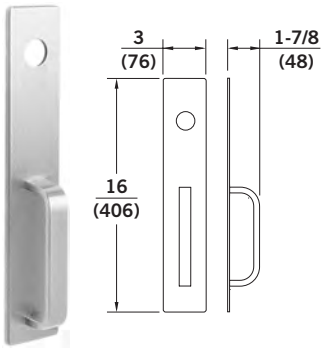

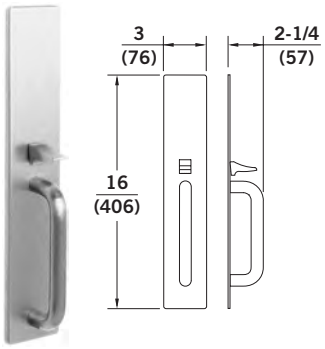

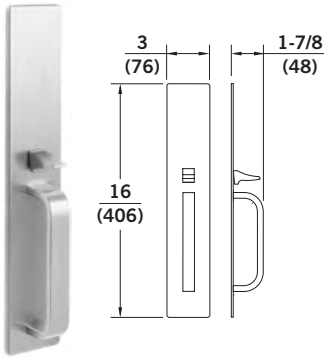

Trim Descriptions	3" Wide Flat Plate Rectangular Pull with Cylinder Hole (mortise)	3" Wide Flat Plate Tubular Pull with Thumbpiece	3" Wide Flat Plate Rectangular Pull with Thumbpiece
Trim Designation	PRT03M	HTT22, HTT22CV, HTT22M	HRT22, HRT22CV, HRT22M
Handing	—	—	—
Function	03 or 04 (with CD device)	22	22
DORMA Cylinder (default)	90A10SC118 – Mortise * 90A13SC118 – Mortise **	—	—
DORMA Cylinder (optional SFIC)	97B10BA138 – 7-pin * 97B13BA138 – 7-pin **	—	—

NOTE:

* Devices shipped **before** November 2014

** Devices shipped **after** November 2014

See chart on page 49 for more information.

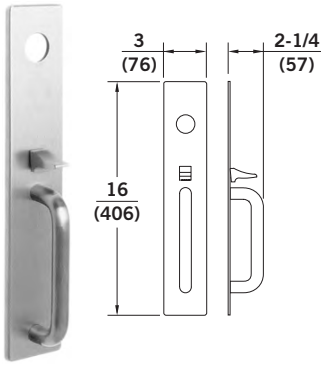

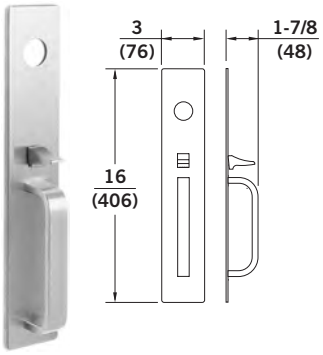

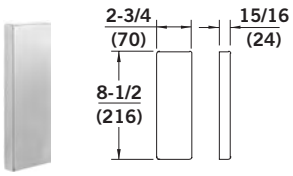

Trim Descriptions	3" Wide Flat Plate Tubular Pull with Thumbpiece and Cylinder Hole	3" Wide Flat Plate Rectangular Pull with Thumbpiece and Cylinder Hole	Raised Escutcheon Plate Dummy Trim
Trim Designation	HTT05, HTT05CV, HTT05M, HTT06, HTT06CV	HRT05, HRT05CV, HRT05M, HRT06, HRT06CV	YODT
Handing	—	—	—
Function	05 or 06 (HTT06, HTT06CV)	05 or 06 (HRT06, HRT06CV)	DT
DORMA Cylinder (default)	90A10SC118 – Mortise	90A10SC118 – Mortise	—
DORMA Cylinder (optional SFIC)	97A10BA138 – 7-pin	97A10BA138 – 7-pin	—

WIDE STILE ESCUTCHEON TRIM

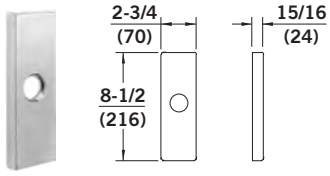

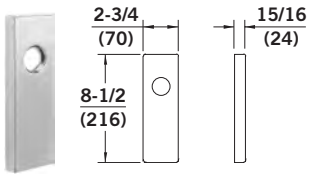

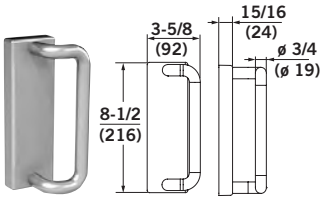

Trim Descriptions	Raised Escutcheon Plate with Cylinder Hole	Raised Escutcheon Plate with Cylinder Hole (mortise)	Raised Escutcheon Plate Tubular Pull
Trim Designation	Y003	Y003M	YP02
Handing	—	—	—
Function	03 or 04 (with CD device)	03 or 04 (with CD device)	02
DORMA Cylinder (default)	80R20SC – Rim	90X10SC158 – Mortise * 90A13SC118 – Mortise **	—
DORMA Cylinder (optional SFIC)	87R20BA – 7-pin	97D10BA134 – 7-pin * 97B13BA138 – 7-pin **	—

NOTE:

* Devices shipped **before** November 2014

** Devices shipped **after** November 2014

See chart on page 49 for more information.

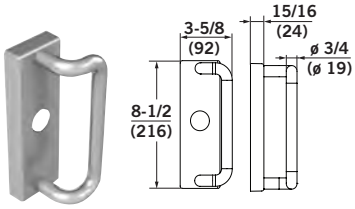

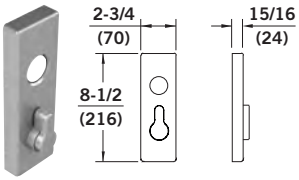

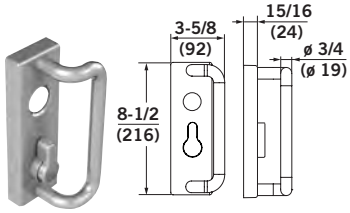

Trim Descriptions	Raised Escutcheon Plate Tubular Pull with Cylinder Hole	Raised Escutcheon Plate with Cylinder Hole and Thumbturn	Raised Escutcheon Plate Tubular Pull with Cylinder Hole and Thumbturn
Trim Designation	YP03	Y011, Y012	YP11, YP12
Handing	—	—	—
Function	03 or 04 (with CD device)	11 or 12	11 or 12
DORMA Cylinder (default)	80R20SC – Rim	80R20SC – Rim	80R20SC – Rim
DORMA Cylinder (optional SFIC)	87R20BA – 7-pin	87R20BA – 7-pin	87R20BA – 7-pin

WIDE STILE ESCUTCHEON TRIM

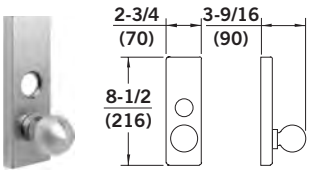

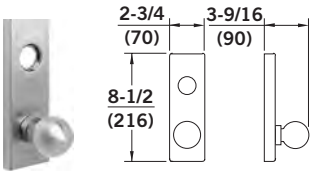

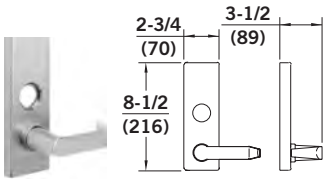

Trim Descriptions	Raised Escutcheon Plate Knob with Cylinder Hole (rigid trim)	Raised Escutcheon Plate Knob with Cylinder Hole (mortise × rigid trim)	Raised Escutcheon Plate Rectangular Lever with Cylinder Hole (rigid trim) (R trim shown)
Trim Designation	YK03R	YK03MR	Y*x*03R
Handing	—	—	—
Function	03 or 04 (with CD device)	03 or 04 (with CD device)	03 or 04 (with CD device)
DORMA Cylinder (default)	80R20SC – Rim	90X10SC158 – Mortise * 90A13SC118 – Mortise **	80R20SC – Rim
DORMA Cylinder (optional SFIC)	87R20BA – 7-pin	97D10BA134 – 7-pin * 97B13BA138 – 7-pin **	87R20BA – 7-pin

NOTE:

* Devices shipped **before** November 2014

** Devices shipped **after** November 2014

See chart on page 49 for more information.

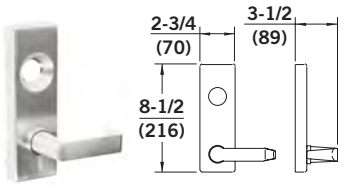

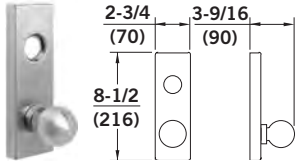

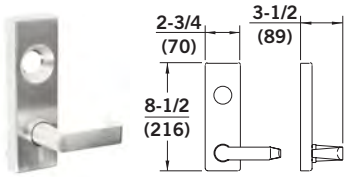

Trim Descriptions	Raised Escutcheon Plate Rectangular Lever with Cylinder Hole (mortise × rigid trim) (R trim shown)	Raised Escutcheon Plate Knob with Cylinder Hole	Raised Escutcheon Plate Rectangular Lever with Cylinder Hole (R trim shown)
Trim Designation	Y*x*03MR	YK08M	Y*x*08M, Y*x*08MC
Handing	—	—	Specify Hand YR08MC
Function	03 or 04 (with CD device)	08	08
DORMA Cylinder (default)	90X10SC158 – Mortise * 90A13SC118 – Mortise **	90X10SC158 – Mortise * 90A12SC118 – Mortise **	90X10SC158 – Mortise * 90A12SC118 – Mortise **
DORMA Cylinder (optional SFIC)	97D10BA134 – 7-pin * 97B13BA138 – 7-pin **	97D10BA134 – 7-pin * 97B12BA138 – 7-pin **	97D10BA134 – 7-pin * 97B12BA138 – 7-pin **

NOTE:

* Devices shipped **before** November 2014

** Devices shipped **after** November 2014

See chart on page 49 for more information.

WIDE STILE ESCUTCHEON TRIM

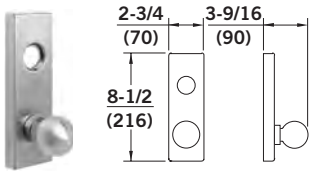

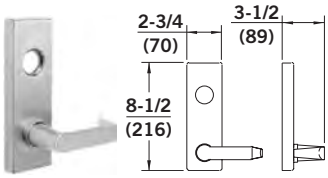

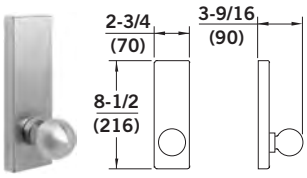

Trim Descriptions	Raised Escutcheon Plate Knob with Cylinder Hole	Raised Escutcheon Plate Rectangular Lever with Cylinder Hole (R trim shown)	Raised Escutcheon Plate Knob
Trim Designation	YK08, YK09, YK08×08*	Y*x*08, Y*x*08C, Y*x*08×08*, Y*x*R09, Y*x*09C	YK02R, YK23, YK23M
Handing	—	Specify Hand YR08C, YR08×08, YR09C	—
Function	08 or 09	08 or 09	02 or 23
DORMA Cylinder (default)	90X10SC118 – Mortise	90X10SC118 – Mortise	—
DORMA Cylinder (optional SFIC)	97X10BA138 – 7-pin	97X10BA138 – 7-pin	—

***Yx08×08** trim requires push-side rim cylinder (ordered separately).
DORMA Cylinder: 80R20SC – Rim
87R20BA – 7-pin IC

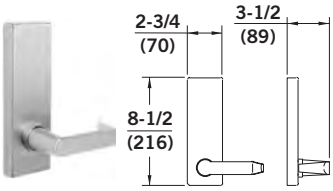

Trim Descriptions	Raised Escutcheon Plate Rectangular Lever (R trim shown)
Trim Designation	Y*x*02R, Y*x*23, Y*x*23M
Handing	—
Function	02 or 23
DORMA Cylinder (default)	—
DORMA Cylinder (optional SFIC)	—

NOTE: When a trim designation includes an *x* (such as Y*x*23), replace *x* with the letter or number assigned to the chosen lever style. For example, YR23 specifies lever style R. See page 34 for details.

WIDE STILE ESCUTCHEON TRIM

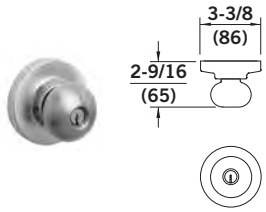

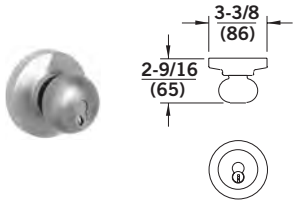

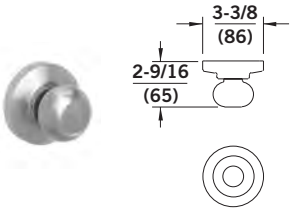

Trim Descriptions	Key-in-Knob	Key-in-Knob Interchangeable Core	Knob Interchangeable Core
Trim Designation	9K03, 9K08	9K03J, 9K08J	9K23
Handing	—	—	—
Function	03 or 08	03 or 08	23
DORMA Cylinder (default)	Includes DORMA key-in-lever/ knob cylinder 7013SC KD	Accepts SFIC	—
DORMA Cylinder (optional SFIC)	—	77BAxxx – 7-pin	—

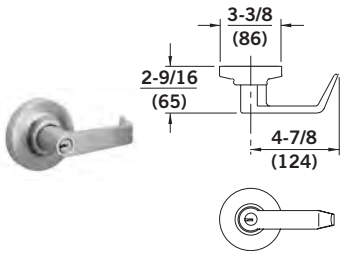

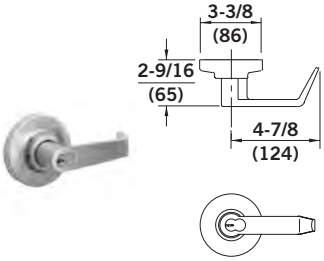

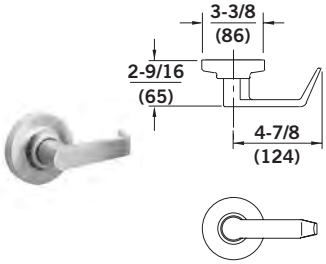

Trim Descriptions	Key-in-Rectangular Lever* (R trim shown)	Key-in-Rectangular Lever Interchangeable Core* (R trim shown)	Rectangular Lever* (R trim shown)
Trim Designation	9*x*03, 9*x*08	9*x*03J, 9*x*08J	9*x*23
Handing	—	—	—
Function	03 or 08	03 or 08	23
DORMA Cylinder (default)	Includes DORMA key-in-lever/ knob cylinder 7013SC KD	Accepts SFIC	—
DORMA Cylinder (optional SFIC)	—	77BAxxx – 7-pin	—

* Sectional Trim is available with R, C, or G Levers only;
See page 36 for ordering.

NOTES

- Key-in-knob and key-in-lever trim are field-reversible for handing.
- When a Sectional Trimtrim designation includes an x (such as 9x 08), replace x with the letter or number assigned to the chosen lever style. For example, 9R08 specifies lever style R. See page 34 and 36 for details.

WIDE STILE VANDAL RESISTANT PULL TRIM

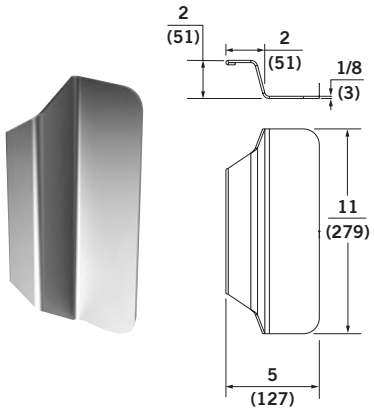

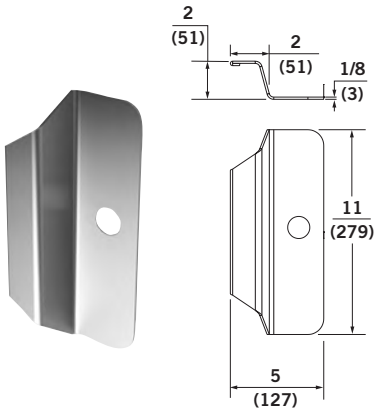

Trim Descriptions	Heavy-Duty Offset Pull	Heavy-Duty Offset Pull with Cylinder Hole
Trim Designation	VRF02SPM	VRF03SPM
Handing	Specify Hand	Specify Hand
Function	03	03
DORMA Cylinder (default)	80R20SC – Rim	80R20SC – Rim
DORMA Cylinder (optional SFIC)	—	—

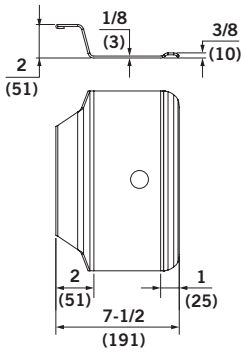

Trim Descriptions	Heavy-Duty Offset Pull
Trim Designation	POF03HDAJ
Handing	Specify Hand
Function	03
DORMA Cylinder (default)	80R20SC – Rim
DORMA Cylinder (optional SFIC)	—

CYLINDER SPECIFICATIONS

Rim Cylinders

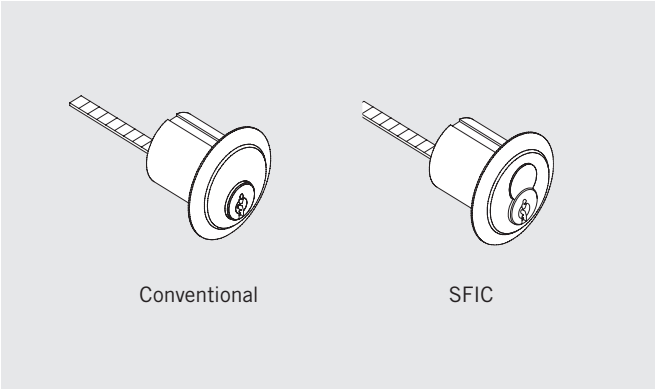

Mortise Cylinders

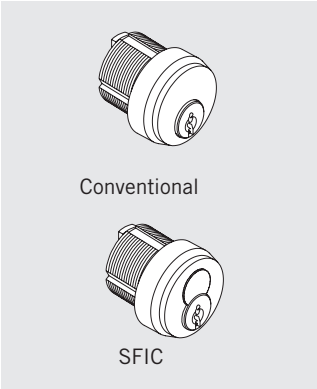

Key-in-Lever Cylinders

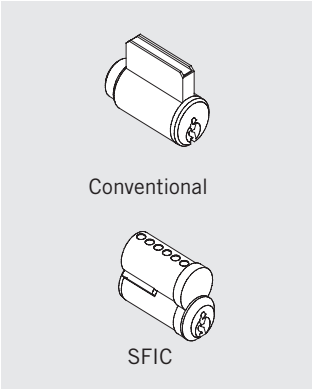

Application	ANSI Function	Cylinder Type	Conventional (Default)	Cam	SFIC 7-Pin
Cylinders for 9100/F9100 Concealed Vertical Rod, 9300/F9300 Rim, and 9400/F9400 Surface Vertical Rod Wide Stile Devices					
Sectional Trim (Key-in-Lever)	03, 04, 08	Key-in-lever	7013SC	NA	77BA
Wide Plate Trim	03, 04	Rim	80R20SC	NA	87R20BA
Wide Plate Trim	05, 06	Mortise	90A10BA118	#10	97A10BA138
Narrow Plate Trim	03, 04	Rim	80R20SC	NA	87R20BA
Y Escutcheon Trim	03, 04	Rim	80R20SC	NA	87R20BA
Y Escutcheon Trim	08	Mortise	90×10SC118	#10	97C10BA138
Y Escutcheon Trim	09	Mortise	90×10SC118	#9	97C10BA138
Cylinders for 9500/F9500 Mortise Devices shipped prior to 11/14					
Wide Plate Trim	03, 05	Mortise	90A10SC118	#10	97B10BA138
Wide Plate Trim	03	Mortise	90A10SC118	#10	97B10BA138
Y Escutcheon Trim	03, 08	Mortise	90×10SC158	#10	97D10BA134
Cylinders for 9500/F9500 Mortise Devices shipped 11/14 or after					
Wide Plate Trim	03	Mortise	90A13SC118	#13	97B13BA138
Wide Plate Trim	05	Mortise	90A12SC118	#12	97B12BA138
Narrow Plate Trim	03	Mortise	90A13SC118	#13	97B13BA138
Y Escutcheon Trim	03	Mortise	90×13SC118	#13	97C13BA138
Y Escutcheon Trim	05, 08	Mortise	90×12SC118	#12	97C12BA138
Cylinders for Device Options					
CD, BPA, BPAR, DE, DE30, DECBC, DWA, LMMSBP	—	Mortise	90×10SC118	#10	97D10BA138
Cylinders for Mullions					
1340KR Key Removable Mullion	—	Mortise	90×01SC118	#1	97D01BA138
1340SK Mullion Storage Kit	—	Mortise	90×01SC118	#1	97D01BA138

MULLIONS

Removable mullions are used with paired doors where a full-width opening is only occasionally required. Doors are fitted with rim exit devices and normally function as single doors. Available in 8' or 10' lengths.

1310 Aluminum Mullion

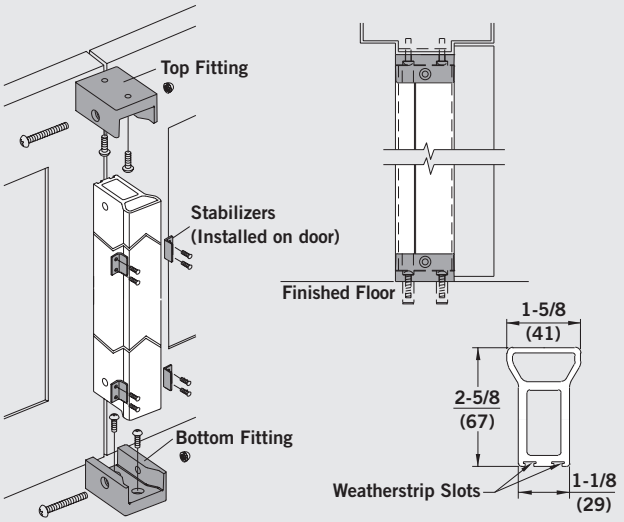

- Meets demands of heaviest use areas.
- Durable extrusion.
- Supplied with wood/ machine screws and anchors.

1310–8 — 8' mullion
1310–10 — 10' mullion
WS1310–8 — 8' mullion with weatherstrip
WS1310–10 — 10' mullion with weatherstrip

Finish
Aluminum: 628 (Satin)
Bronze: 695 (Dark)

1330 Steel Mullion

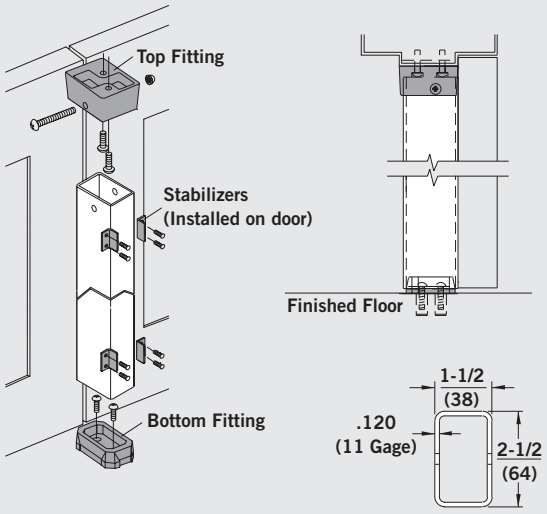

- Ideal for high-abuse areas such as schools.
- Meets demands of heaviest use areas.
- Heavy-gauge, smooth-surface steel construction.
- Attractive tube shape with rounded corners.
- Supplied with wood/ machine screws and anchors.

1330–8 — 8' mullion
1330–10 — 10' mullion

Finish
Prime: 600

F1300 Steel Mullion

- For use with U.L. listed fire exit devices.
- Meets demands of heaviest use areas.
- Large top and bottom fittings for extra strength.
- Heavy-duty tube with rounded corners.
- Standard 8' length.
- Supplied with wood/ machine screws and anchors.

F1300–8 — 8' fire-rated mullion
1300–8 — 8' non-fire-rated mullion
1300–10 — 10' non-fire-rated mullion

Finish
Prime: 600

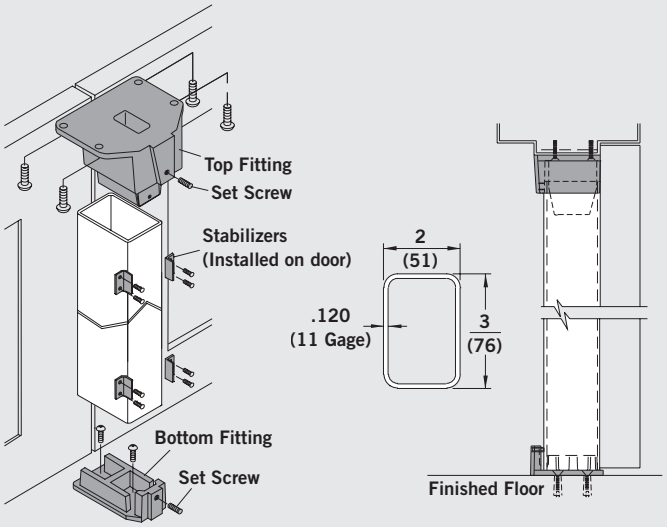

F1340KR Key Removable Steel Mullion

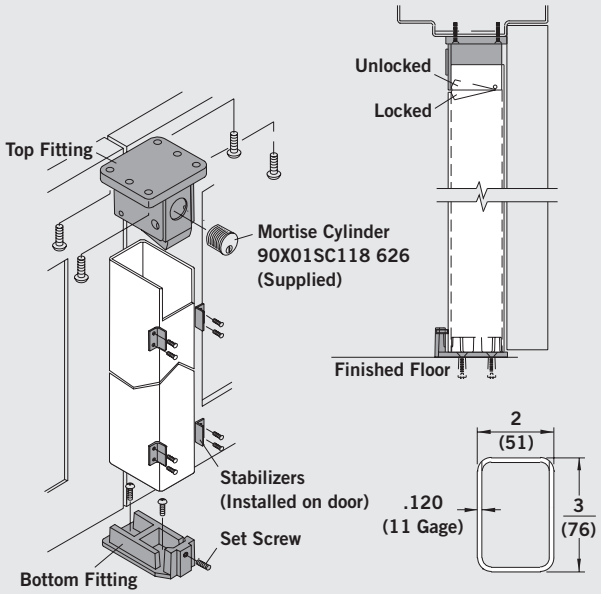

- Easily removable with key.
- Keying is standard 1-1/8" mortise cylinder with 01 (AR) cam.
- For use with U.L. listed fire exit devices.
- Meets demands of heaviest use areas.
- Large top and bottom fittings for extra strength.
- Heavy-duty tube with rounded corners.
- Standard 8' length.
- Supplied with wood/ machine screws and anchors.
- Includes conventional default mortise cylinder: 90X01SC118 626.

F1340KR–8 — 8' fire-rated key removable mullion
1340KR–8 — 8' non-fire-rated key removable mullion
1340KR–10 — 10' non-fire-rated key removable mullion
1340KR–EL–8 — 8' non-fire rated wired key removable mullion
1340KR–EL–10 — 10' non-fire rated wired keyed removable mullion

Finish
Prime: 600

Optional DORMA SFIC: 97D01BA138 — 7-pin

HC1300 Steel HC Mullion

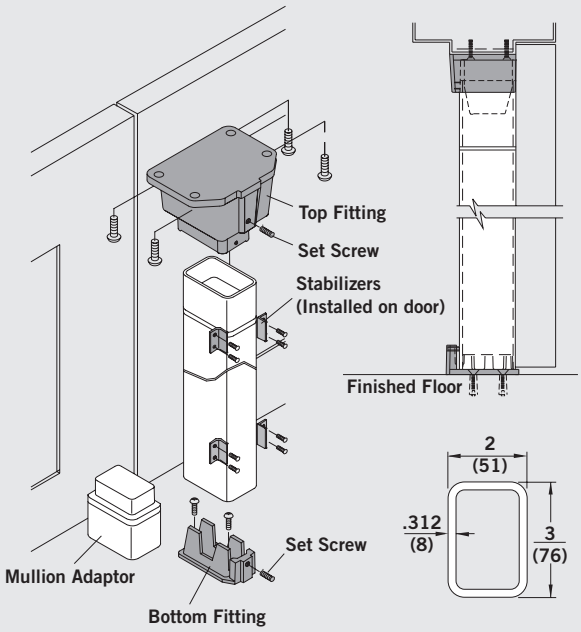

- For use with pairs of hurricane-rated rim devices on openings up to 8'0" × 8'0".
- 80 psf design pressure rating positive/negative deflection with HC9300 rim device.
- Tested to Miami-Dade TAS 201, 202, 203.
- Large top and bottom fittings for extra strength.
- Heavy-duty tube with rounded corners.
- Standard 8' length.
- Supplied with appropriate screws and anchors.

HC1300–8 — Heavy-duty 5/16" wall HC mullion*

Finish
Prime: 600

*For other HC mullions, consult factory.

1340SK Mullion Storage Kit

- For use with 1340 key removable steel mullion.
- Locking cylinder can be keyed into master key system.
- Includes conventional default mortise cylinder: 90X01SC118 626.

Optional DORMA SFIC: 97D01BA138 — 7-pin

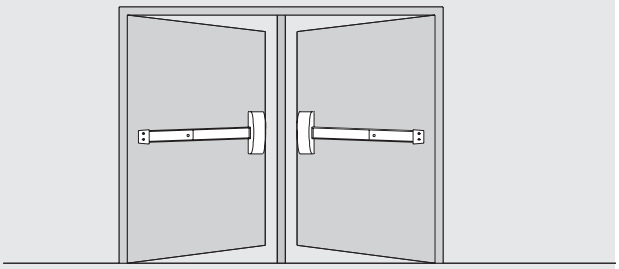

9600/F9600 NARROW STILE CONCEALED VERTICAL ROD EXIT DEVICES

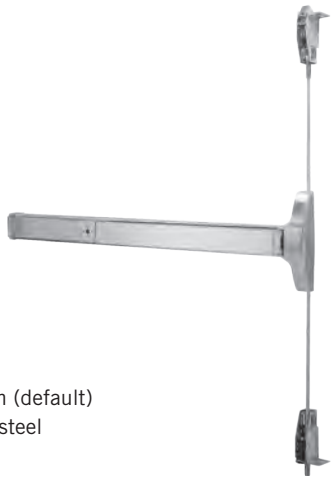

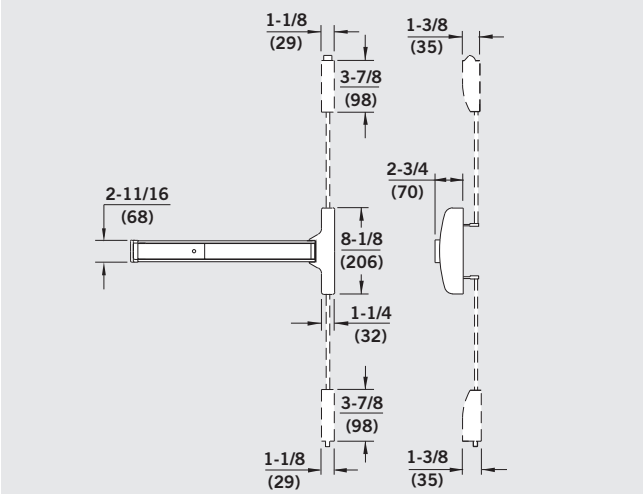

Specify Door Brackets
NS – 2-1/8" narrow stile aluminum (default)
WD – Narrow stile wood or hollow steel

Model	Function	Operation	Trim Model									
9600 F9600	01	Exit Only (no trim)										
9600 F9600	DT	Dummy Trim	ZODT									
9600	02	Entrance by trim when actuating bar is locked down.	OP02		ZP02		ZK02R		Z*x*02R			
9600 F9600	03	Entrance by trim when latch bolt is retracted by key. Key removable only when locked.	ZO03*		ZP03		ZK03R		Z*x*03R			
CD9600	04	Entrance by trim when latch bolt is retracted by key or set in a retracted position by key.	ZO03*		ZP03		ZK03R		Z*x*03R			
9600 F9600	08	Entrance by knob or lever. Key locks or unlocks knob or lever.					ZK08		Z*x*08		Z*x*08C	
9600 F9600	09	Entrance by knob or lever only when released by key. Key removable only when locked.					ZK09		Z*x*09		Z*x*09C	
9600 F9600	11	Entrance by thumbturn and pull. Key locks or unlocks thumbturn.	Z011		ZP11							
9600 F9600	12	Entrance by thumbturn and pull only when released by key. Key removable only when locked.	Z012		ZP12							
9600 F9600	23	Entrance by knob or lever (no cylinder). Knob or lever always active.					ZK23		Z*x*23			
9600 F9600	25	Entrance by thumbturn and pull (no cylinder). Thumbturn always active.			ZP25							

* Pull by others.

NOTE: When a trim designation includes an *x* (such as Z*x*23), replace *x* with the letter or number assigned to the chosen lever style. For example, ZR23 specifies lever style R. See page 63 for details.

Standard Strikes

No. 418
Top Strike 9600/F9600,
9600 LB/F9600 LB

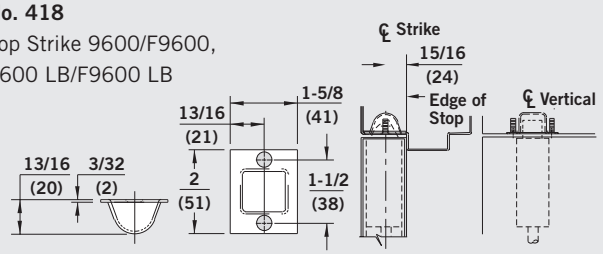

No. 439
Bottom Strike 9600/F9600

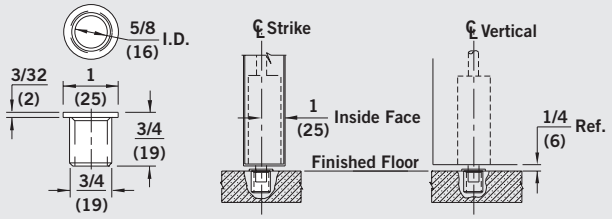

Optional Strikes

No. 340
For bottom slidebolt

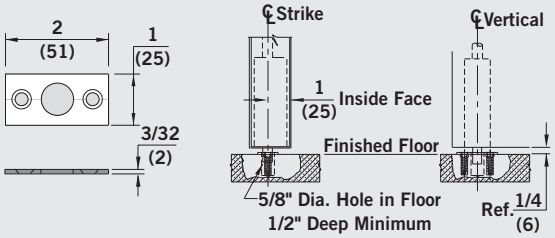

No. 419
For wood frame installations

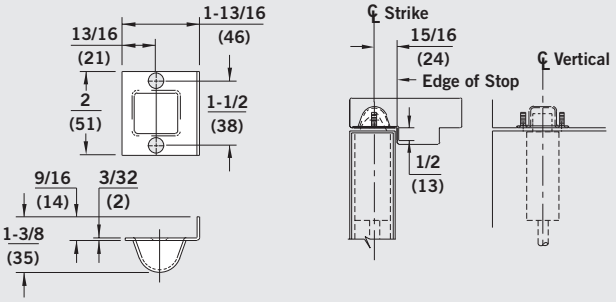

No. 431
For use with optional pullman
bottom latch bolt

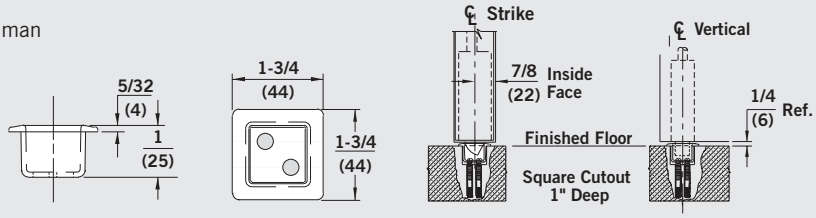

Minimum Stile & Vertical Reference

Vertical Rod × Vertical Rod

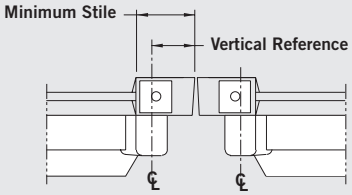

Vertical Rod × Rim

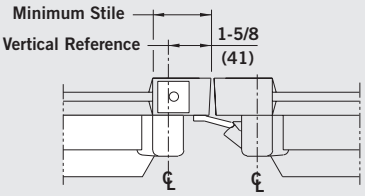

9600	Vertical Reference	Minimum Stile
No Trim/OP02	1-1/4 (32)	1-7/8 (48)
Z Trim	1-1/4 (32)	2-1/16 (52)

F9600	Vertical Reference	Minimum Stile
No Trim/OP02	2-3/4 (70)	3-3/16 (81)
Z Trim	2-3/4 (70)	3-3/16 (81)

Not Fire Rated

9600	Minimum Stile
No Trim/OP02	2-3/16 (56)
Z Trim	2-7/16 (62)

9700/F9700 NARROW STILE RIM EXIT DEVICES

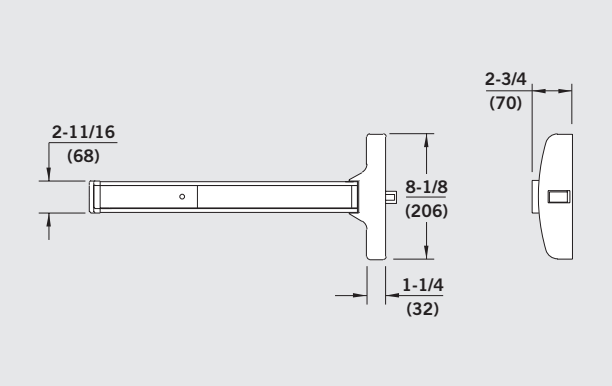

Model	Function	Operation	Trim Model									
9700 F9700	01	Exit Only (no trim)										
9700 F9700	DT	Dummy Trim	ZODT									
9700	02	Entrance by trim when actuating bar is locked down.	OP02		ZP02		ZK02R		Z*x*02R			
9700 F9700	03	Entrance by trim when latch bolt is retracted by key. Key removable only when locked.	ZO03*		ZP03		ZK03R		Z*x*03R			
CD9700	04	Entrance by trim when latch bolt is retracted by key or set in a retracted position by key.	ZO03*		ZP03		ZK03R		Z*x*03R			
9700 F9700	08	Entrance by knob or lever. Key locks or unlocks knob or lever.					ZK08		Z*x*08		Z*x*08C	
9700 F9700	09	Entrance by knob or lever only when released by key. Key removable only when locked.					ZK09		Z*x*09		Z*x*09C	
9700 F9700	11	Entrance by thumbturn and pull. Key locks or unlocks thumbturn.	ZO11		ZP11							
9600 F9600	12	Entrance by thumbturn and pull only when released by key. Key removable only when locked.	ZO12		ZP12							
9700 F9700	23	Entrance by knob or lever (no cylinder). Knob or lever always active.					ZK23		Z*x*23			
9700 F9700	25	Entrance by thumbturn and pull (no cylinder). Thumbturn always active.			ZP25							

* Pull by others.

NOTE: When a trim designation includes an *x* (such as Z*x*23), replace *x* with the letter or number assigned to the chosen lever style. For example, ZR23 specifies lever style R. See page 63 for details.

Standard Strikes

No. 430
Standard strike with 9700

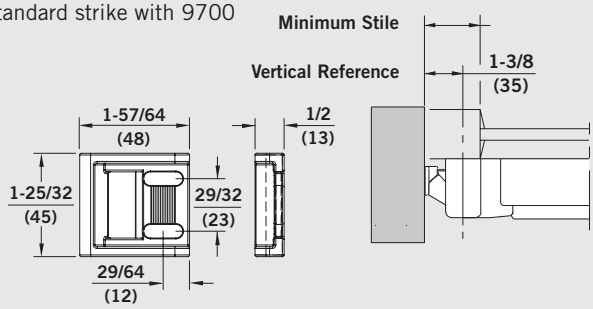

Strike	Vertical Ref./ Min. Stile	No Trim/ OP02	Trim
430	Vertical Ref.	1-3/8 (35)	1-3/8 (35)
	Min. Stile	2-7/16 (62)	2-9/16 (65)

All dimensions based on 1/2" (13) stop height

No. 463
Standard strike with F9700

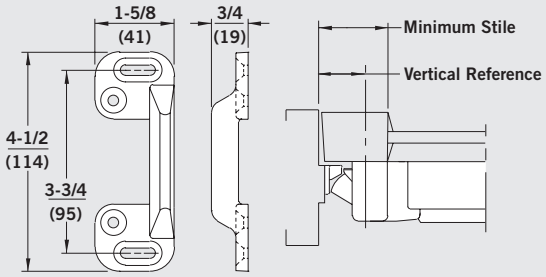

Strike	Vertical Ref./ Min. Stile	No Trim/ OP02	Trim
463	Vertical Ref.	1-1/2 (38)	1-1/2 (38)
	Min. Stile	2-9/16 (65)	2-11/16 (68)

All dimensions based on 1/2" (13) stop height

Optional Strikes

No. 486
Roller strike

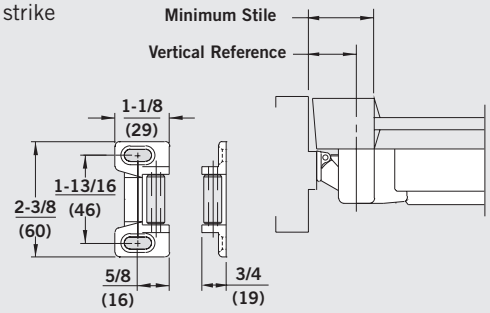

Strike	Vertical Ref./ Min. Stile	No Trim/ OP02	Trim
486	Vertical Ref.	1-1/2 (38)	1-1/2 (38)
	Min. Stile	2-9/16 (65)	2-11/16 (68)

All dimensions based on 1/2" (13) stop height

No. 320
Overlap strike

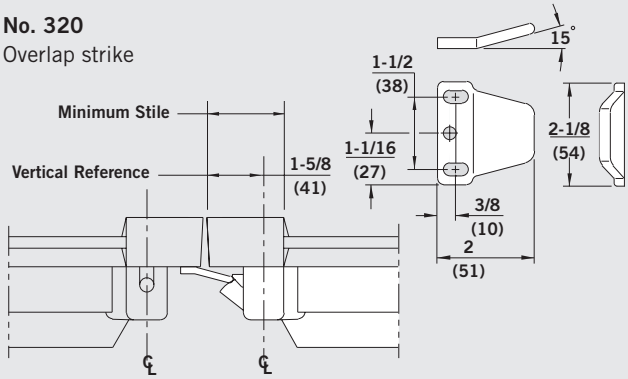

Not Fire Rated

9700	Minimum Stile
No Trim/OP02	2-3/16 (56)
Z Trim	2-7/16 (62)

9800/F9800 NARROW STILE SURFACE VERTICAL ROD EXIT DEVICES

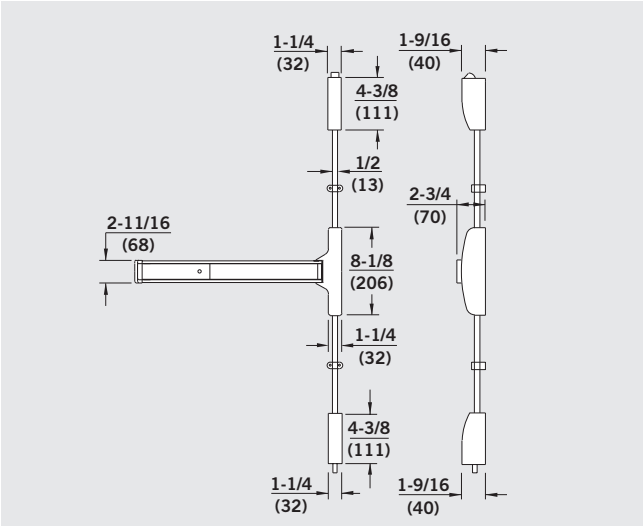

Model	Function	Operation	Trim Model									
9800 F9800	01	Exit Only (no trim)										
9800 F9800	DT	Dummy Trim	ZODT									
9800	02	Entrance by trim when actuating bar is locked down.	OP02		ZP02		ZK02R		Z*x*02R			
9800 F9800	03	Entrance by trim when latch bolt is retracted by key. Key removable only when locked.	ZO03*		ZP03		ZK03R		Z*x*03R			
CD9800	04	Entrance by trim when latch bolt is retracted by key or set in a retracted position by key.	ZO03*		ZP03		ZK03R		Z*x*03R			
9600 F9600	08	Entrance by knob or lever. Key locks or unlocks knob or lever.					ZK08		Z*x*08		Z*x*08C	
9800 F9800	09	Entrance by knob or lever only when released by key. Key removable only when locked.					ZK09		Z*x*09		Z*x*09C	
9800 F9800	11	Entrance by thumbturn and pull. Key locks or unlocks thumbturn.	ZO11		ZP11							
9800 F9800	12	Entrance by thumbturn and pull only when released by key. Key removable only when locked.	ZO12		ZP12							
9800 F9800	23	Entrance by knob or lever (no cylinder). Knob or lever always active.					ZK23		Z*x*23			
9800 F9800	25	Entrance by thumbturn and pull (no cylinder). Thumbturn always active.			ZP25							

* Pull by others.

NOTE: When a trim designation includes an *x* (such as Z*x*23), replace *x* with the letter or number assigned to the chosen lever style. For example, ZR23 specifies lever style R. See page 63 for details.

Standard Strikes

No. 426

Top strike 9800/F9800, 9800 LB/F9800 LB

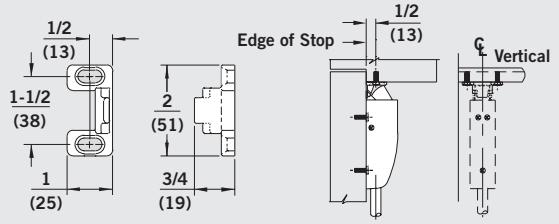

No. 439

Bottom strike 9800/F9800

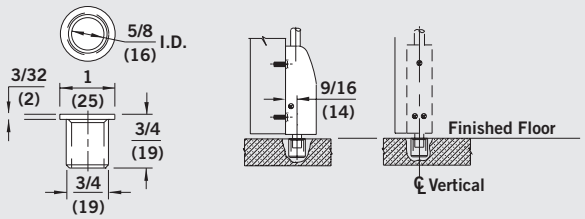

Optional Strikes

No. 340

For bottom slide bolt

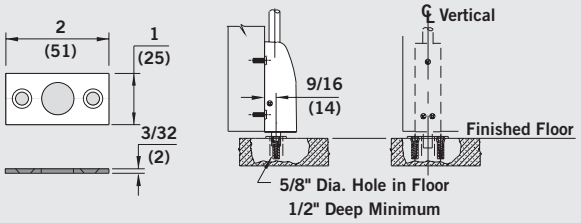

No. 416V

For use with optional pullman type latch bolt

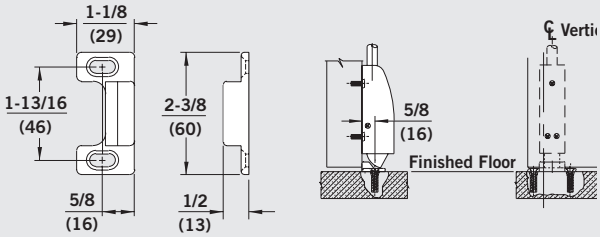

No. 431

For use with optional pullman type latch bolt

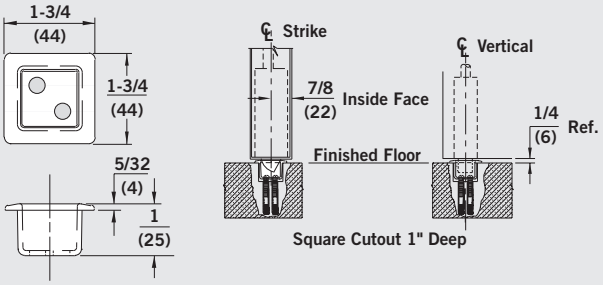

No. 426A

Flush door and frame conditions

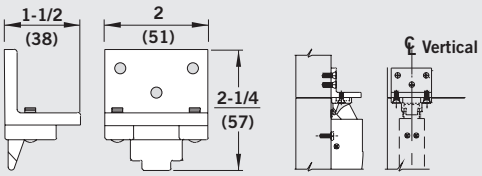

Minimum Stile & Vertical Reference

Vertical Rod × Vertical Rod

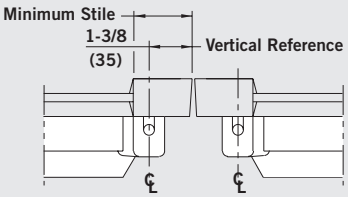

9800/F9800	Minimum Stile
No Trim/OP02	2 (51)
Z Trim	2-3/16 (56)

Vertical Rod × Rim

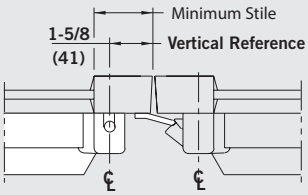

Not Fire Rated

9800	Minimum Stile
No Trim/OP02	2-3/16 (56)
Z Trim	2-7/16 (62)

ACCESSORIES

Non-functioning Exit Devices
The non-functioning exit device looks exactly like the 9000 Series, but has no latching mechanism. Units can be furnished in standard **AA, BB,** or **CC** width or cut to special size when door width is specified. Order any applicable trim for push/pull function. Choose the type of operation required.

Rigid Touchbar Device
Touchpad is permanently fixed and immobile.
9235 – Narrow Stile

Moveable Touchbar Device
Same as rigid touchbar device, but touchbar is moveable. Similar to standard 9000 Series device.
9236 – Narrow Stile

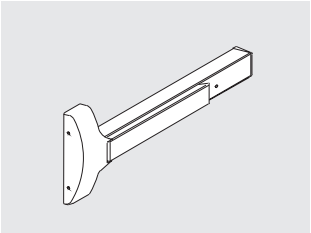

Moveable Touchbar Device with Microswitch
Same as moveable touchbar device, but includes microswitch that can be used to control electromagnetic locks, electric strikes, or other electronic appliances.
9236MS – Narrow Stile

9600/F9600	2 packs
9600/F9600 w/trim	1 pack
9700/F9700	2 packs
9700/F9700 w/trim	1 pack
9800/F9800	5 packs
9800/F9800 w/trim	4 packs

Sex Nuts
The chart above serves as a simple reference when specifying DORMA 9000 Series exit devices and trim.

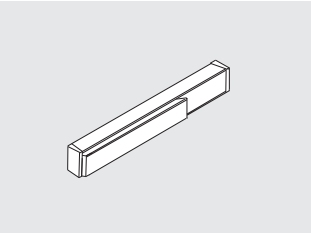

Dummy Bar
The dummy bar is designed as a companion to 9000 Series devices. Units consist of the touchbar assembly only and do not include the device chassis or chassis cover. Door width must be specified.

Rigid Dummy Bar
Touchbar only. Touchpad is permanently fixed and immobile.
9230 – Narrow Stile

Dummy Bar with Microswitch
Touchbar is moveable and activates included microswitch. Can be used to control electromagnetic locks, electric strikes, or other electronic appliances.
9230MS – Narrow Stile

Vision Lite Shim Kit
Contains two 1/8" thick shims. Permits shimming of the exit device maximum 1/4" off door face without affecting U.L. listing. Designed to accommodate glass lite installed in door. Furnished bright zinc plated. Optional finishes available, consult factory.
GK9200 – Narrow Stile

Conversion Kits
The following conversion kits are the same as options detailed elsewhere in this brochure, but in kit form with required components and installation instructions for field installation/retrofit.

MS Kit – Monitor Switch in Touchbar Kit
BPA Kit – Battery Powered Exit Alarm Kit
BPAR Kit – Battery Powered Exit Alarm, 4 Minute Reset Kit
DWA Kit – Direct Wired Alarm Kit
CD Kit – Cylinder Dogging Kit (less cylinder)

Security Screws
For applications where tamper-resistant security screws are required, specify **TX**.

NOTE: Special screw bits are required.

OPTIONAL ELECTRIC FUNCTIONS

Motorized Latch Retraction
Specify **MLR**. A motor concealed in the touchbar assembly provides retraction of the latch by driving in the touch bar to allow access from the secure side of the door. MLR can also be used to electrically dog/hold the exit push bar in a retracted position during non-secure hours (latch is retracted). Remote control can be accomplished with switching devices such as key switches and card readers that provide a normally open electrical contact. The motor is rated at 24 VDC, .88 AMP. The motor draws approximately 400 milliamp during continuous operation. DORMA recommends use of either PS610RF or PS532RF to power one or two MLR devices respectively, but can also be powered with DORMA's ED900 Low Energy ADA Operator.

Electric Latch Retraction
Specify **ES**. A solenoid concealed in the touchbar assembly provides instantaneous retraction of the latch to allow access from the secure side of the door. Remote control can be accomplished with switching devices such as key switches and card readers that provide a normally open electrical contact. The solenoid is rated for 24 VDC, 14–18 AMP continuous duty, 24 VDC, 14–18 AMP inrush for 200 milliseconds, 1 AMP holding current. **Requires PS501 power supply.**

Battery Back-up
Battery Back-up power supply options are available when using either the PS406BB or PS462BB power supplies. Specify **ESB** when ordering Electric Latch Retraction exit device.

Requires PS501 power supply and ES105 power transfer.
Not available with **C** or **CC** size devices, or 9500 mortise exit devices.

Monitor Switch
Specify **MS**. Two micro switches in the touchbar assembly functioning as form C contacts provide local and/or remote notification of two separate appliances when the touchbar is depressed. Each switch is rated for .5 AMP @ 28 VDC maximum.

Latch Monitor
Specify **LM**. A microswitch attached to the device chassis provides local and/or remote notification of the exit device rods without depressing the touchbar. The single-pole, double-throw switch is rated at .50 AMP @ 28 VDC maximum.

Latch Monitor with Monitor Switch
Specify **LM/MS**. A combination of Latch Monitor and Monitor Switch functions in one device.

Latch Monitor with Monitor Switch and Bypass
Specify **LM/MS BP**. Same as LM/MS above, but an additional single-pole, double-throw switch is triggered by a mortise cylinder for alarm bypass. Cylinder furnished.

Electric Dogging
Specify **MD**. A solenoid concealed in the touchbar provides instantaneous dogging of the touchbar assembly. **Requires PS545 power supply and ES105 power transfer.**

Motorized Dogging
Specify **MLR**. This feature can be used to electrically dog/hold the exit push bar in a retracted position during non-secure hours. (Latch is retracted.)

PS Series Power Supplies
The **ES100 Power Supply** is capable of powering and controlling (1) DE9000 Series Exit Device.

- Input: 120 V
- Input Circuit Protection: 1.3 A fuse
- Output: 24 VDC, 6 A surge for 0.5 seconds, .65 A continuous, per zone
- Output Circuit Protection: 3 A push to reset circuit breaker
- Enclosure: 8" H × 8" W × 4" D NEMA 1 Type enclosure for indoor use with hinged cover and knock-outs

The **PS501 Power Supply** is capable of powering and controlling (2) 9000 Series Exit Devices with the ES Electric Latch Retraction feature. Also has the capability of powering (2) additional 9000 Series Exit Devices with an optional card. Specify option **ES2** CARD.

- Input: 120 volts
- Input circuit protection: 1 AMP circuit breaker
- Output: 24 VDC, 14–18 AMP surge, 2 AMP @ 5 volt continuous, per zone
- Output circuit protection: 4 AMP fuse
- Enclosure: 8" H × 8" W × 4" D NEMA 1 Type enclosure for indoor use with hinged cover and knock-outs

The **PS532RF** Power Supply is capable of powering and controlling (2) or **PS610RF** can power and control (1) 9000 Series Exit Device with the MLR Motorized Latch Retraction feature.

NOTE: The PS5352RF or PS610RF can be used with the ES105 power transfer cable, 75200 electric intermediate, or electric through wire hinges when rated to carry a minimum of 1 AMP continuous power. Power transfer device wires may require doubling or tripling depending on wire gage supplied.

- Input: 115VAC/60hz
- Output:
  PS532RF –
  2.0A @ 24VDC, Class 2
  PS610RF –
  1.0A @ 24VDC, Class 2
- Enclosure:
  PS532 –
  14"H × 16" W × 6.5" D
  PS610 –
  12.5" H × 12.5" W × 4" D

The **ES105** is a power transfer with stainless steel housing and flexible tube. Secure and inconspicuous channel to bring power from the frame to the door. Narrow, shallow channel easily mortises into door edges. Accepts up to 5/16" diameter wire bundle. Accommodates doors that swing open 120°. Unit is concealed when the door is closed. Suitable for wood, aluminum, or steel applications.

Finish
Stainless: 630 (Satin)

DORMA DE9000 SERIES DELAYED EGRESS EXIT DEVICES

Certification

- Certified/listed to ANSI/BHMA 156.3, Grade 1 for exit devices.
- U.L. and C.U.L. listed under their continuing reinspection programs and conforms to standard U.L. 10C positive pressure testing.
- Complies with NFPA 101 life safety code. Fire rated devices comply with NFPA 80 fire doors and windows. Field selectable to comply with IBC2012
- Devices, trim, pulls, and levers comply with the Americans for Disabilities Act, 1994, and ANSI 117.1-2003 for accessible and usable buildings and facilities.
- Contributes to U.S. Green Building Council, LEED MR Credits 2.1, 4.1, 4.2 and 5.1.
- Listed with the California Department of Forestry and Fire Protection, Office of the State Fire Marshal (wide stile devices only).
- Hurricane-code approved to Miami-Dade County Florida and Florida State Building Code acceptance (9300, 9400, 9500, 9700).

Specifications

All devices shall be DORMA DE9000 Series delayed exit devices with ES105 power transfer and ES100 power supply. Devices shall be rim, mortise, or concealed vertical rod. Devices to have a nuisance alarm with a steady tone to limit inadvertent activation. Depressing and holding the touchbar beyond the nuisance alarm period must initiate a 15 second delay with an intermittent tone. Following the irreversible 15 second delay alarm period, the device must release and continue an indefinite steady tone alarm until reset.

All devices must be capable of rearming by turning the key switch on the device to **rearm** or by using the alternate remote rearm capability. The same key switch must disarm the device for authorized egress.

All devices must provide two sets of relay contacts that activate when the device is in an irreversible alarm to control remote audible/visual alarms included in DORMA control consoles.

All devices must have an LED indicator light for conveying the status of the device.

Internal locking feature is required to further enhance security when subjected to forced opening.

Devices must provide an input for use with an external door position switch to prohibit doors from being held open while the device is armed.

The device must alarm simultaneously with the activation of the door position switch.

When power is cut to the devices, they must release and function as typical exit devices in the event of a fire or emergency situation.

All devices to have heavy-duty cast chassis.

All device touchbar, rail, and cover assemblies shall be constructed of heavy gauge solid wrought materials for true architectural finishes or color coated finishes where applicable.

Fire rated versions shall be available for labeled applications.

All concealed vertical rod devices shall have pullman type top latch bolts and round slidebolt bottom latches.

All devices to have deadlocking latch bolts with 3/4" throw where applicable.

All units shall offer a full range of free wheeling operational trim, except mortise devices.

All units shall offer optional rigid and clutch style trim, where applicable.

All devices to be furnished with appropriate mounting hardware including both wood and machine screws, as well as sex nuts where required. An adhesive sign with an operation directive must be supplied.

Optional Specifications

All devices to be furnished with a 30 second irreversible delay alarm. Written approval from the authority having jurisdiction required. Specify **30**.

All devices for CBC compliant applications to include special CBC door label. Specify **CBC**.

All concealed vertical rod devices to have pullman type bottom latch bolt. Specify **PB**.

All surface/concealed vertical rod devices to have extended top rod up to 10'. Specify **ETR** for 8', 9', or 10'.

All devices to use a glass lite shim kit to raise the device from the door surface to accommodate glass light molding. Specify **GK9000**.

All devices for labeled wood or composite doors to be furnished with sex bolts. Specify **SNB**.

All devices to be furnished with rigid trim. Specify **R** after trim number.

All devices to be furnished with clutch style lever trim. Specify **C** after lever trim number.

All concealed vertical rod devices installed in aluminum doors to be furnished with appropriate brackets for aluminum door applications. Specify **ALD** (DE9100 only).

All devices to use tamper-resistant security screws for attaching the end cap, chassis cover, and strikes. Specify **TX**.

Finishes

Architectural Finishes

- Brass: 605 (Bright) or 606 (Satin)
- Bronze: 611 (Bright), 612 (Satin), or 613 (Oxidized Satin)
- Nickel: 619 (Satin)
- Black: 693
- Chrome: 625 (Bright) or 626 (Satin)
- Stainless Steel: 630 (Satin)

Powder Coated Finishes

- Aluminum: 689
- Bronze: 691 (Dull) or 695 (Dark Duranodic)
- Black: 693
- Gold: 696
- Clear Powder Coating: Specify **P**
- Anti-Microbial: Specify **AM**

Warranty

For details, refer to **DORMA Limited Warranty** on our website at **go.dorma.com/terms.**

DORMA DE9000 DELAYED EGRESS FEATURES

Delayed Egress
The DE9000 is armed and the touchbar will not activate the latch bolt for 15 seconds (30 second factory option available). This provides a controlled delayed egress while simultaneously sounding a local and remote audible alarm. After the delay time, unrestricted emergency egress is available.

Nuisance Alarm
The nuisance alarm, with a steady warning tone, deters inadvertent activation of the device when the touchbar is depressed. Releasing the touchbar before the predefined nuisance alarm time of 1 or 3 seconds terminates the alarm, and the device returns to the armed mode. Depressing the touchbar longer than the predefined time will initiate the 15 second irreversible delay cycle. The 1 or 3 second nuisance alarm time is included in the 15 second irreversible delay time. The nuisance alarm time is field-selectable for three seconds or one second by a dip switch. **A 30 second delay option is available set at the factory. Written approval is required from the authority having jurisdiction.**

Local or Remote Alarm
Device has an internal 85 dB alarm which will sound indefinitely in the alarm state until the device is reset. Additionally, a form **C** relay is provided for activating remote audible/visual signaling of DORMA control console or third party console, security panel, or other audible/visual signaling device.

Indicator LED
Status for the DE9000 can be determined by the indicator LED which is visible in varied lighting conditions. When the device is disarmed for an extended time in the **bypass** mode, the LED will maintain a slow green flash. When activated for **authorized egress**, the LED displays a rapid green flash until the device automatically rearms. In the armed state, the LED maintains a solid green. When the touchbar is depressed for exit, the nuisance alarm will sound while the LED remains solid green. In the 15 second irreversible delay cycle, the LED turns solid yellow. In the alarm state, the LED is solid red.

Key Switch Control
This integral key switch provides the means to locally rearm the device from the alarm state, disarm for authorized egress, and set the device for the **bypass** feature. A mortise cylinder is supplied with the device.

Remote Authorized Egress
This function allows override of the device in the armed state. The device will unlock for egress and automatically rearm to the delayed egress mode in 10 seconds. The field-selectable reset time allows up to a 20 second reset. Typical activation devices include remote consoles, key switches, or card readers. This input is controlled with a momentary action normally open switch.

Remote Rearm
Remote rearming of the device is allowed from the alarm state. Typical activation devices include remote consoles or key switches. This input is controlled with a momentary action normally open switch. Consult local authority having jurisdiction when using this feature.

Door Position Input
An input for use with an external door position switch is provided. This input switch is a maintained action normally closed contact. The device alarms simultaneously with the contact opening. The door is prohibited from being forced or held open unauthorized while the device is armed. The field-selectable authorized egress and bypass functions ignore the door position input for authorized exit or entrance.

Electrical Specifications
Input Power
24 VDC @ .5 A continuous
(5 A inrush for 350 ms).

Power must be provided by a DORMA ES100 power supply.

Door Position Input
Requires a normally closed contact.

Pigtail provided for the following:
Input power, remote authorization egress, remote bypass/rearm, relay contacts for audible/visual console, door position switch input, fire alarm contacts, and pairs of doors.

DE9000 Exit Device

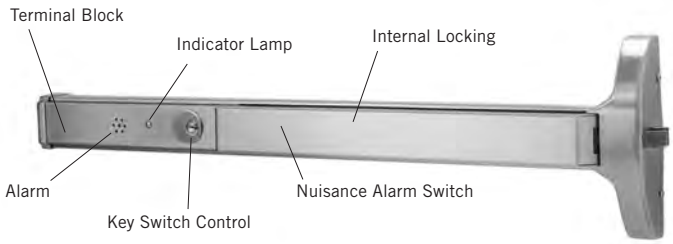

AUXILIARY EQUIPMENT

Alarms

The 9000 Series exit devices are available with an integral battery powered alarm. The 102 decibel alarm contained in the panic device touchbar and rail assembly activates when the touchbar is depressed and sounds continuously until the device is reset or the battery is completely discharged. Alternatively, a factory-furnished option allows the alarm to sound for four (4) minutes, then automatically rearm.

Furnished with and controlled by a lock cylinder and key, the unit allows ten (10) seconds to exit through the door after arming the alarm, indicated by an intermittently flashing red LED light in the touchbar. A yellow LED in the touchbar will flash until manually reset by key to indicate an unauthorized exit even if the alarm has automatically reset.

The unit is furnished with a 9 volt, industrial-grade battery concealed in the end cap assembly for easy replacement. A tamper-proof switch will activate the alarm if unauthorized removal of the battery is attempted. Option is available for 12 or 24 volt direct power wiring.

- Specify **BPA** for battery alarm device.
- Specify **BPAR** for 4 minute auto reset battery alarm device.
- Specify **DWA** for direct hard-wired option.
- Size **AA** device fits 48" wide door and can be cut to fit 37-1/2" wide doors.
- Size **BB** device fits 36" wide door and can be cut to fit 31-1/2" wide doors.
- Size **CC** device fits 36" wide door and can be cut to fit 28-1/2" wide doors.

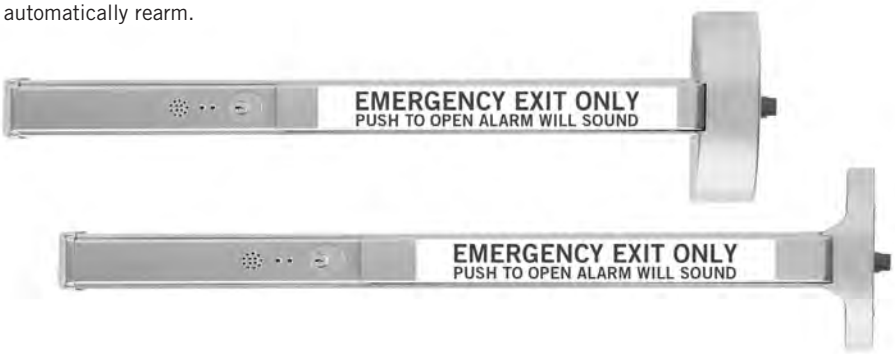

TRIM OPTIONS

Clutch Lever Trim – Free wheeling, vandal-resistant lever standard, except on 9500 mortise devices. Although mandated to meet ADA requirements, lever handles are especially subject to vandalism and damage. The **clutch** option for lever trim includes an internal slip clutch mechanism which allows the lever handle to break away without damage or violating security when excessive force is applied. The lever can be lifted back to horizontal to reset it.

An internal dead stop limits the break away to 55° of lever handle rotation. Specify **C** to trim designation. Specify hand.

Rigid Trim – Rigid lever and knob option. Specify **R** to trim designation.

Retrofit – For Von Duprin 98/99 Series Rim Devices. Specify **R1** (narrow and wide plate trim only).

LEVER & KNOB STYLES FOR Z NARROW STILE TRIM

A

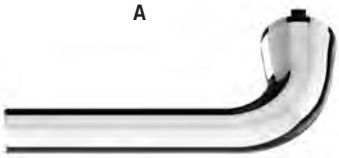

C

D

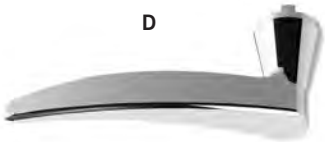

F

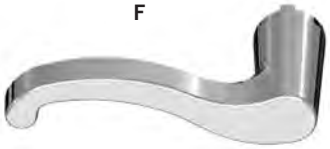

G

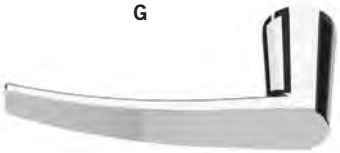

K

R

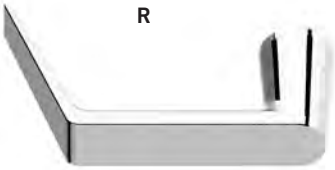

T

N

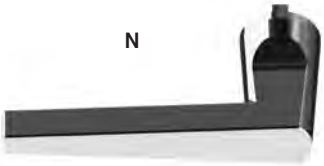

V

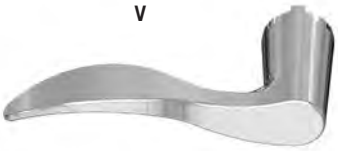

L109

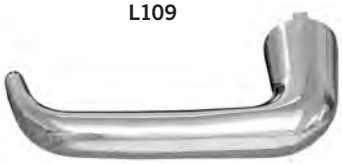

L114

L110

L112

L113

L117

L118

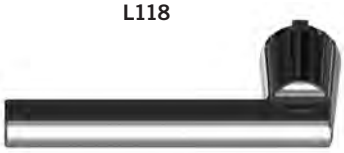

Finishes

Architectural Finishes

- Brass: 605 (Bright) or 606 (Satin)
- Bronze: 611 (Bright), 612 (Satin), or 613 (Oxidized Satin Oil Rubbed)
- Nickel: 619 (Satin)
- Chrome: 625 (Bright) or 626 (Satin)
- Stainless Steel: 630 (Satin)

Powder Coated Finishes

- Aluminum: 689
- Bronze: 691 (Dull) or 695 (Dark Duranodic)
- Black: 693
- Gold: 696

Clear Powder Coating

Specify P

Antimicrobial Protected Coating

Specify AM

9000 SERIES NARROW STILE Z TRIM

- Heavy-duty, vandal-resistant escutcheon.
- Corrosion-resistant, stainless steel offered standard.
- Hundreds of lever and pull styles and finish combinations to satisfy the most demanding interior design requirement.
- Choose from 14 ANSI/BHMA standard architectural finishes, or dozens of DORMA Custom RAL colors, or, for those unique interior designs, DORMA's Designer Color special color matching system.
- Antimicrobial protected coating when ultra clean environments are specified.
- Clear powder coating for outdoor or highly corrosive environments that need added protection. Also minimizes the appearance of fingerprints.
- Conventional rim or mortise cylinders included standard.
- Configurable with SFIC to accommodate DORMA's patented SKC key control system.
- **EP** European profile cylinder available with functions 08 and 09.
- All standard devices and trim are designed for 1-3/4"–2-1/4" thick doors. For door thickness greater than 2-1/4", select door thickness option.
- Under U.S. law, qualifies for *Made in U.S.A. of U.S. and imported parts*.
- Steeleville, IL manufacturing facility certified to ISO 9000 and ISO 14001.

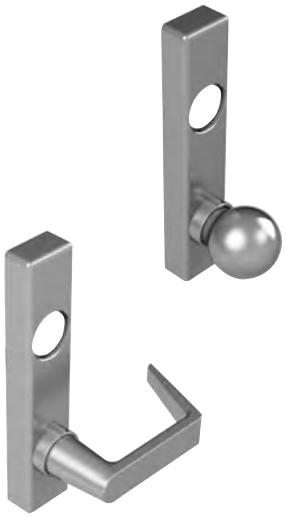

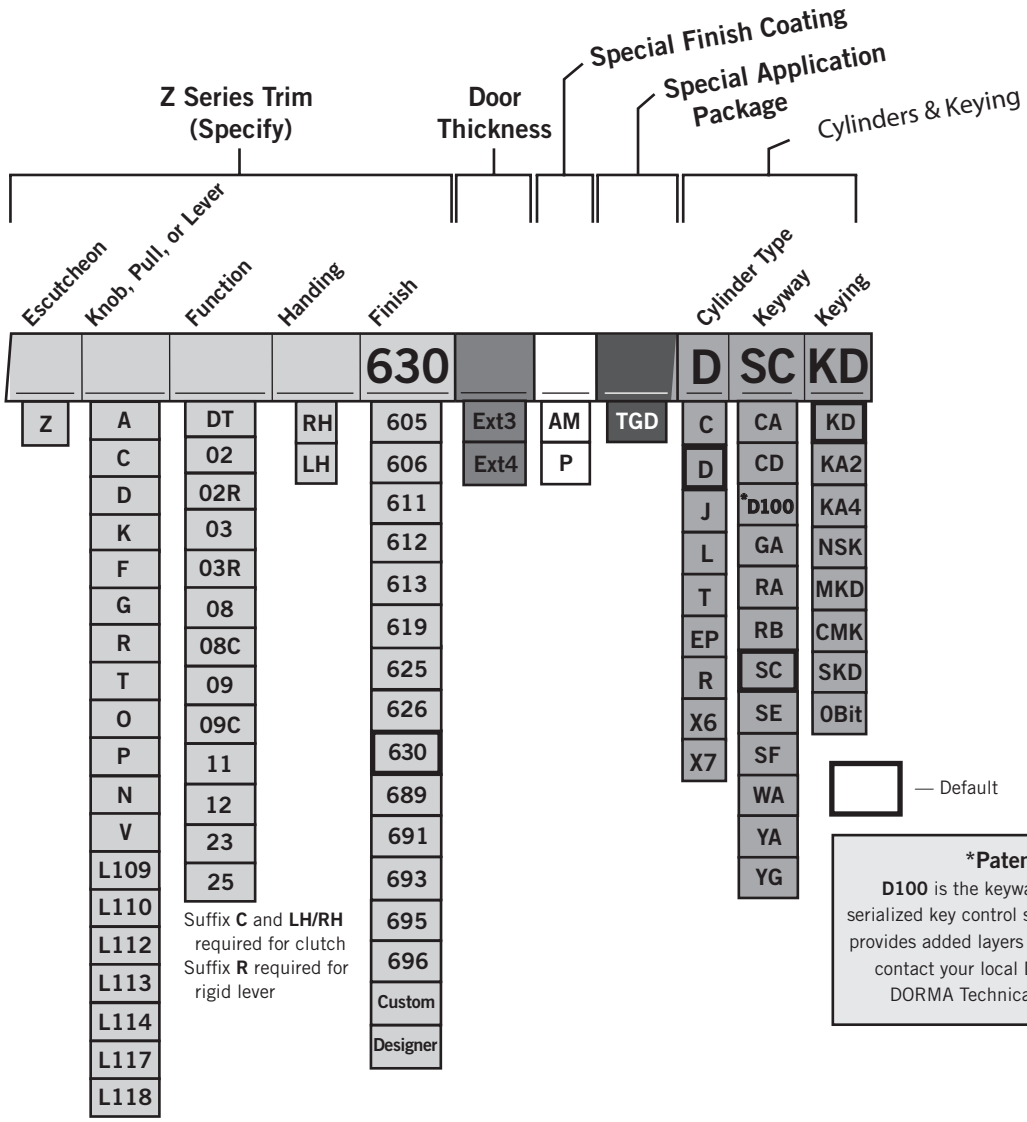

***Patented Key Control**

D100 is the keyway for DORMA's patented **SKC** serialized key control system. **SKC** is internet based and provides added layers of security. For more information, contact your local DORMA sales representative or DORMA Technical Service at 800-523-8483.

9000 SERIES NARROW STILE PULL TRIM

- Heavy-duty stainless steel offered standard.
- Choose from 14 ANSI/BHMA standard architectural finishes, or dozens of DORMA Custom RAL colors, or, for those unique interior designs, DORMA's Designer Color special color matching system.
- Antimicrobial protected coating when ultra clean environments are specified.
- Clear powder coating for outdoor or highly corrosive environments that need added protection. Also minimizes the appearance of fingerprints.
- All standard devices and trim are designed for 1-3/4"–2-1/4" thick doors. For door thickness greater than 2-1/4", consult DORMA Technical Service.
- Under U.S. law, qualifies for *Made in U.S.A. of U.S. and imported parts*.
- Steeleville, IL manufacturing facility certified to ISO 9000 and ISO 14001.

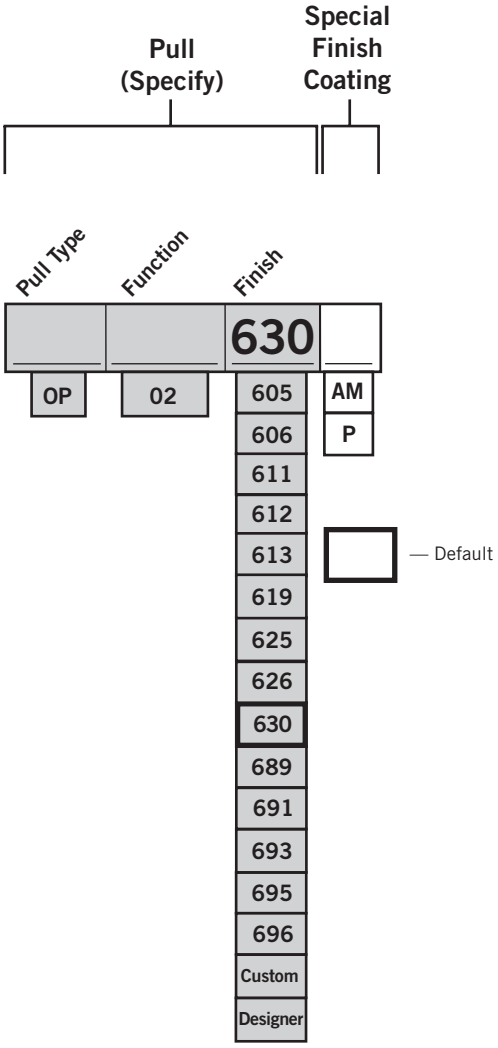

NARROW STILE TRIM

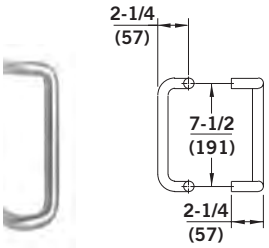

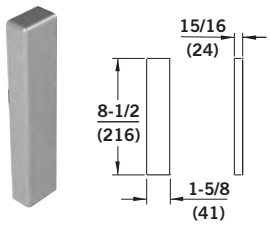

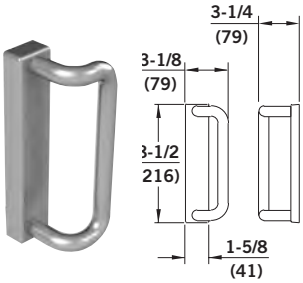

Trim Descriptions	Tubular Pull	Raised Escutcheon Plate Dummy Trim	Raised Escutcheon Plate Tubular Pull
Trim Designation	OP02	ZODT	ZP02
Handing	—	—	—
Function	02	DT	02
DORMA Cylinder (default)	—	—	—
DORMA Cylinder (optional SFIC)	—	—	—

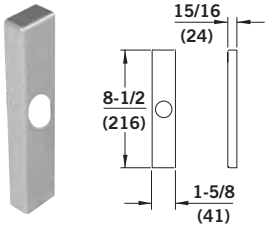

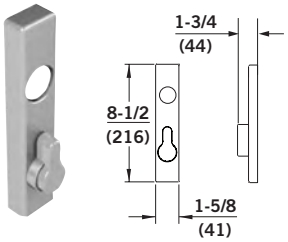

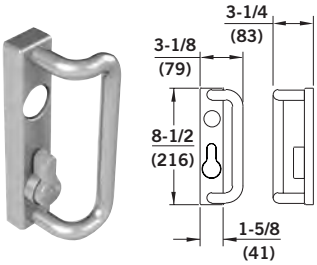

Trim Descriptions	Raised Escutcheon Plate with Cylinder Hole (pull by others)	Raised Escutcheon Plate with Cylinder Hole and Thumbturn	Raised Escutcheon Plate Tubular Lever with Cylinder Hole and Thumbturn
Trim Designation	ZO03	ZO11, ZO12	ZP11, ZP12
Handing	—	—	Specify Hand
Function	03 or 04 (with CD device)	11 or 12	11 or 12
DORMA Cylinder (default)	80R30SC – Rim	80R30SC – Rim	90X13SC118 – Mortise
DORMA Cylinder (optional SFIC)	87R30BA – 7-pin	87R30BA – 7-pin	97X09BA138 – 7-pin

NARROW STILE TRIM

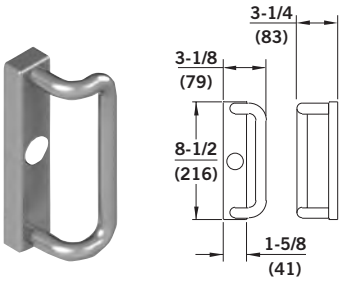

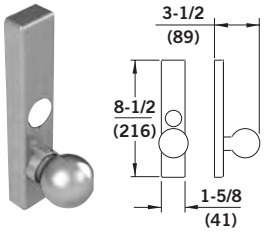

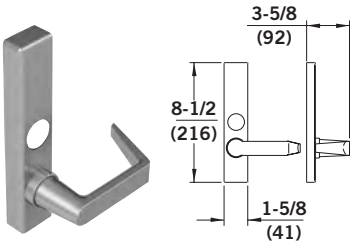

Trim Descriptions	Raised Escutcheon Plate Tubular Pull with Cylinder Hole	Raised Escutcheon Plate Knob with Cylinder Hole (rigid trim)	Raised Escutcheon Plate Rectangular Lever with Cylinder Hole (rigid trim) (R trim shown)
Trim Designation	ZP03	ZK03R	Z*x*03R
Handing	Specify Hand	—	—
Function	03 or 04 (with CD device)	03	03
DORMA Cylinder (default)	80R20SC – Rim	80R20SC – Rim	80R20SC – Rim
DORMA Cylinder (optional SFIC)	87R20BA – 7-pin	87R20BA – 7-pin	87R20BA – 7-pin

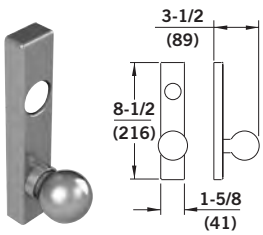

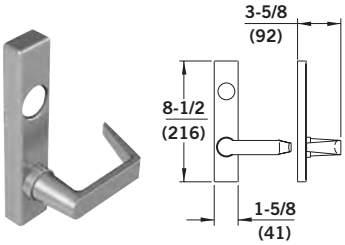

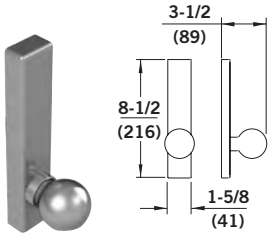

Trim Descriptions	Raised Escutcheon Plate Knob with Cylinder Hole	Raised Escutcheon Plate Rectangular Lever with Cylinder Hole (R trim shown)	Raised Escutcheon Plate Knob (ZK02R rigid trim)
Trim Designation	ZK08, ZK09	Z*x*08, Z*x*08C, Z*x*09, Z*x*09C	ZK02R, ZK23
Handing	—	—	—
Function	08 or 09	08 or 09	02 or 23
DORMA Cylinder (default)	90X13SC118 – Mortise	90X13SC118 – Mortise	—
DORMA Cylinder (optional SFIC)	97X09BA138 – 7-pin	97X09BA138 – 7-pin	—

NOTE: When a trim designation includes an *x* (such as, Z*x*08), replace *x* with the letter or number assigned to the chosen lever style. For example, ZR08 specifies lever style R. See pages 63-64 for details.

NARROW STILE TRIM

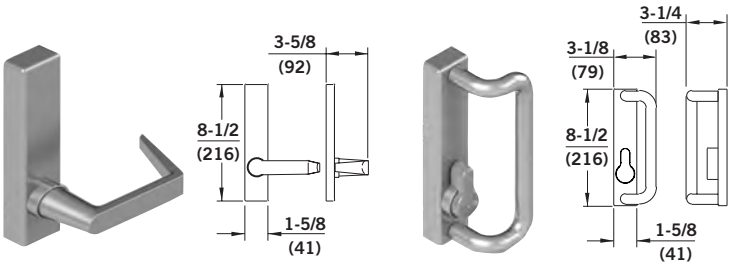

Trim Descriptions	Raised Escutcheon Plate Rectangular Lever (Z*x*02R rigid trim) (R trim shown)	Raised Escutcheon Plate Tubular Pull with Thumbturn
Trim Designation	Z*x*02R, Z*x*23	ZP25
Handing	—	—
Function	02 or 23	25
DORMA Cylinder (default)	—	—
DORMA Cylinder (optional SFIC)	—	—

NOTE: When a trim designation includes an *x* (such as, Z*x*23), replace *x* with the letter or number assigned to the chosen lever style. For example, ZR23 specifies lever style R. See page 63 for details.

CYLINDER SPECIFICATIONS

Rim Cylinders

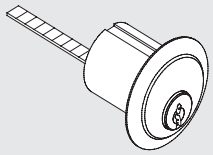

Conventional

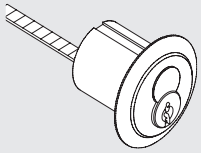

SFIC

Mortise Cylinders

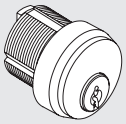

Conventional

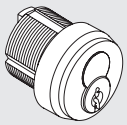

SFIC

Key-in-Lever Cylinders

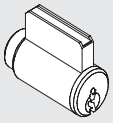

Conventional

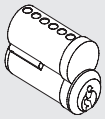

SFIC

Application	ANSI Function	Cylinder Type	Conventional (Default)	SFIC 7-Pin
Cylinders for 9600/F9600 Concealed Vertical Rod, 9700/F9700 Rim, and 9800/F9800 Surface Vertical Rod Devices				
Z Escutcheon Trim	03, 04	Rim	80R20SC	87R20BA
Z Escutcheon Trim	08, 11	Mortise	90X13SC118	97C13BA138
Z Escutcheon Trim	09, 12	Mortise	90X09SC118	97C09BA138
Cylinders for Device Options				
CD, BPA, BPAR, DE, DE30, DECBC, DWA, LMMSBP		Mortise	90X10SC118	97D10BA138
Cylinders for Mullions				
1340KR Key Removable Mullion		Mortise	90X01SC118	97D01BA138
1340SK Mullion Storage Kit		Mortise	90X01SC118	97D01BA138

MULLIONS

Removable mullions are used with paired doors where a full-width opening is only occasionally required. Doors are fitted with rim exit devices and normally function as single doors. Available in 8' or 10' lengths.

1310 Aluminum Mullion

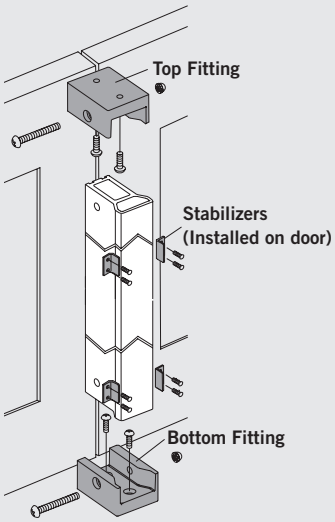

- Meets demands of heaviest use areas.
- Durable extrusion.
- Supplied with wood/ machine screws and anchors.

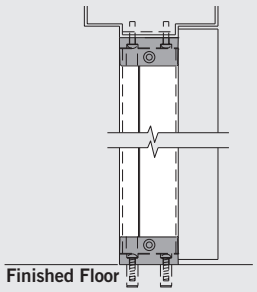

1310–8 — 8' mullion
1310–10 — 10' mullion
WS1310–8 — 8' mullion with weatherstrip
WS1310–10 – 10' mullion with weatherstrip

Finish
Aluminum: 628 (Satin)
Bronze: 695 (Dark)

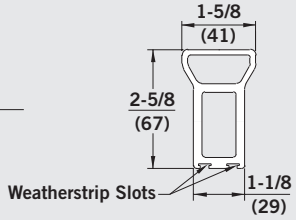

1330 Steel Mullion

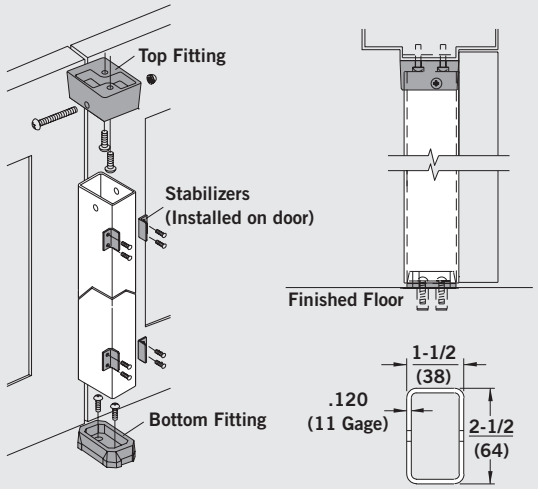

- Ideal for high-abuse areas such as schools.
- Meets demands of heaviest use areas.
- Heavy-gauge, smooth-surface steel construction.
- Attractive tube shape with rounded corners.
- Supplied with wood/machine screws and anchors.

1330–8 — 8' mullion
1330–10 — 10' mullion

Finish
Prime: 600

F1300 Steel Mullion

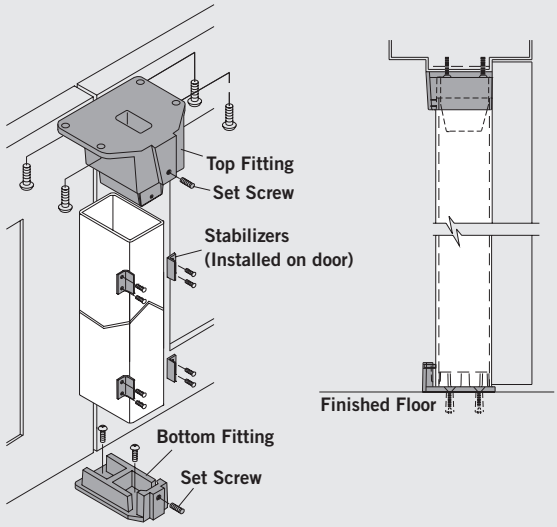

- For use with U.L. listed fire exit devices.
- Meets demands of heaviest use areas.
- Large top and bottom fittings for extra strength.
- Heavy-duty tube with rounded corners.
- Standard 8' length.
- Supplied with wood/machine screws and anchors.

F1300–8 — 8' fire-rated mullion
1300–8 — 8' non-fire-rated mullion
1300–0 — 10' non-fire-rated mullion

Finish
Prime: 600

F1340KR Key Removable Steel Mullion

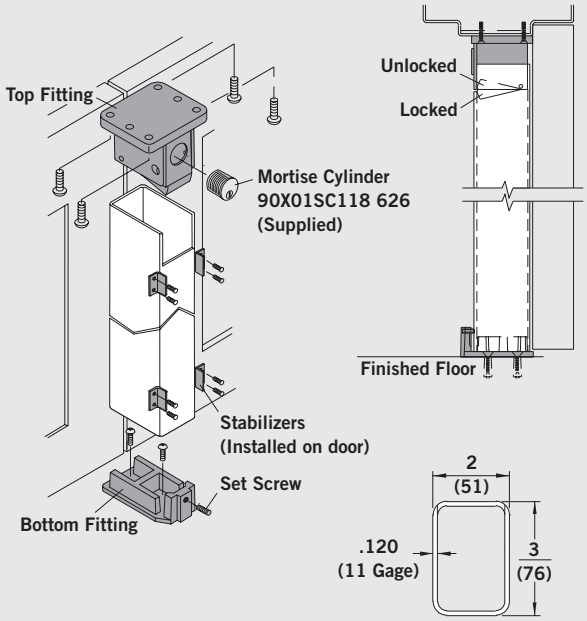

- Easily removable with key.
- Keying is standard 1-1/8" mortise cylinder with 01 (AR) cam.
- For use with U.L. listed fire exit devices.
- Meets demands of heaviest use areas.
- Large top and bottom fittings for extra strength.
- Heavy-duty tube with rounded corners.
- Standard 8' length.
- Supplied with wood/machine screws and anchors.
- Includes conventional default mortise cylinder: 90X01SC118 626

F1340KR–8 — 8' fire-rated key removable mullion
1340KR–8 — 8' non-fire-rated key removable mullion
1340KR–10 — 10' non-fire-rated key removable mullion
1340KR–EL — 8' - 8' non-fire rated wired key removable mullion
1340KR–EL–10 — 10' non-fire rated wired keyed removable mullion

Finish
Prime: 600
Optional DORMA SFIC:
97D01BA138 – 7-pin

HC1300 Steel HC Mullion

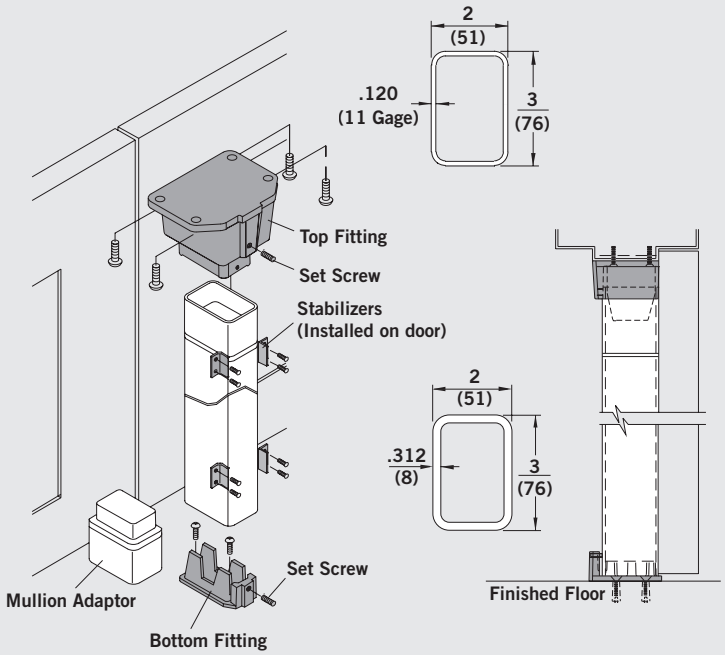

- For use with pairs of hurricane-rated rim devices on openings up to 8'0" × 8'0".
- 80 psf design pressure rating positive/negative deflection with HC9300 rim device.
- Tested to Miami-Dade TAS 201, 202, 203.
- Large top and bottom fittings for extra strength.
- Heavy-duty tube with rounded corners.
- Standard 8' length.
- Supplied with appropriate screws and anchors.

HC1300–8 — Heavy-duty 5/16" wall HC mullion*

Finish
Prime: 600

*For other HC mullions, consult factory.

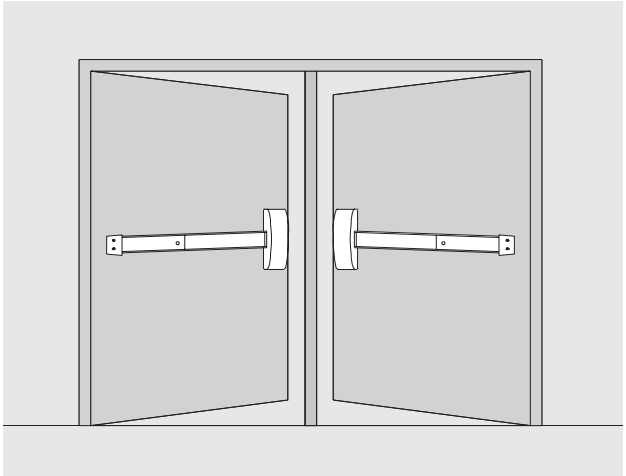

1340SK Mullion Storage Kit

- For use with 1340 key removable steel mullion.
- Locking cylinder can be keyed into master key system.
- Includes conventional default mortise cylinder: 90X01SC118 626.

Optional DORMA SFIC:
97D01BA138 – 7-pin

NOTE: When using a mullion, refer to exit device template for minimum stile and vertical reference dimensions.

07000391 · 4.15 CT · 3M · USA

www.dorma.com

DORMA USA, Inc.
Dorma Drive, Drawer AC
Reamstown, PA 17567
Tel: 800 523 8483
Fax: 800 274 9724
archdw@dorma-usa.com

DORMA Canada
1680 Courtney Park Drive, Unit 13
Mississauga, Ontario L5T 1R4
Tel: 800 387 4938
Fax: 905 670 5850
sales@dormacanada.com

DORMA Mexico
Calle Sur 110 no. 63, Col. Tolteca
01150 México, D.F.
Tel: 5255 5272 6937
Fax: 5255 5272 6948
operacion@dorma.com.mx